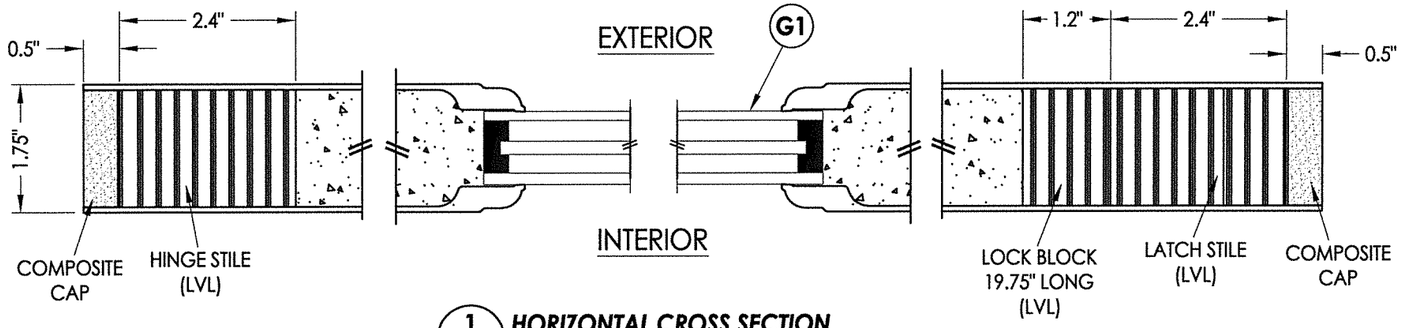

1/2 **HORIZONTAL CROSS SECTION**

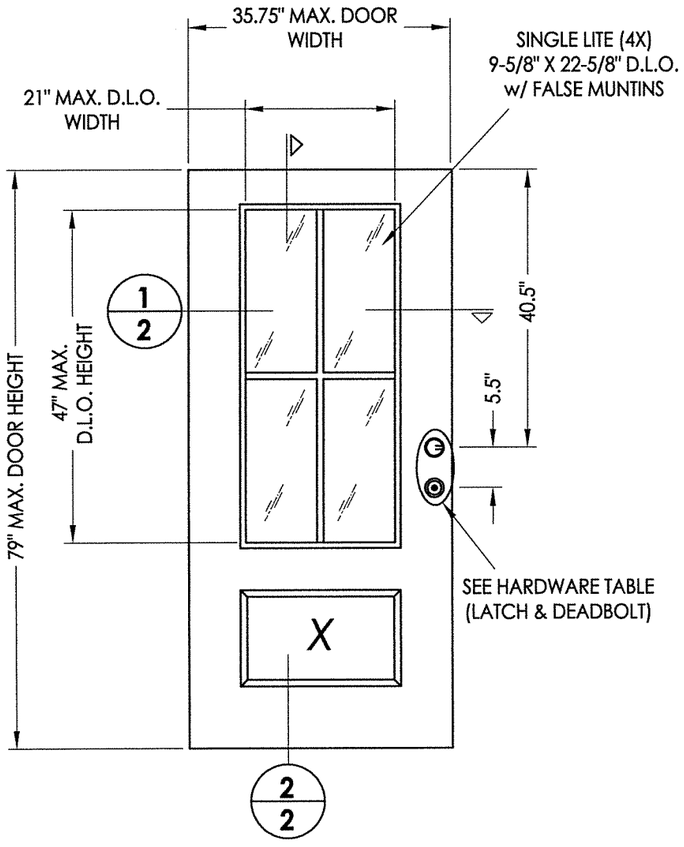

40 **FIBERGLASS DOOR PANEL**

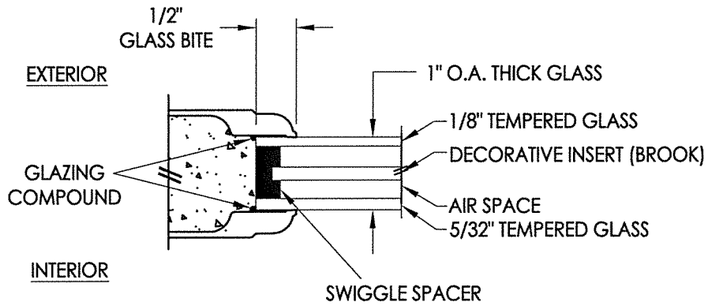

G1 **GLAZING DETAIL**

HARDWARE TABLE		
MANUFACTURER	MODEL	
KWIKSET	LATCH:	SIGNATURE SERIES
	DEADBOLT:	SIGNATURE SERIES (980)
SCHLAGE	LATCH:	F51
	DEADBOLT:	B60N
ROCKWELL	LATCH:	PREMIUM HANDLESET
	DEADBOLT:	PREMIUM DEADBOLT

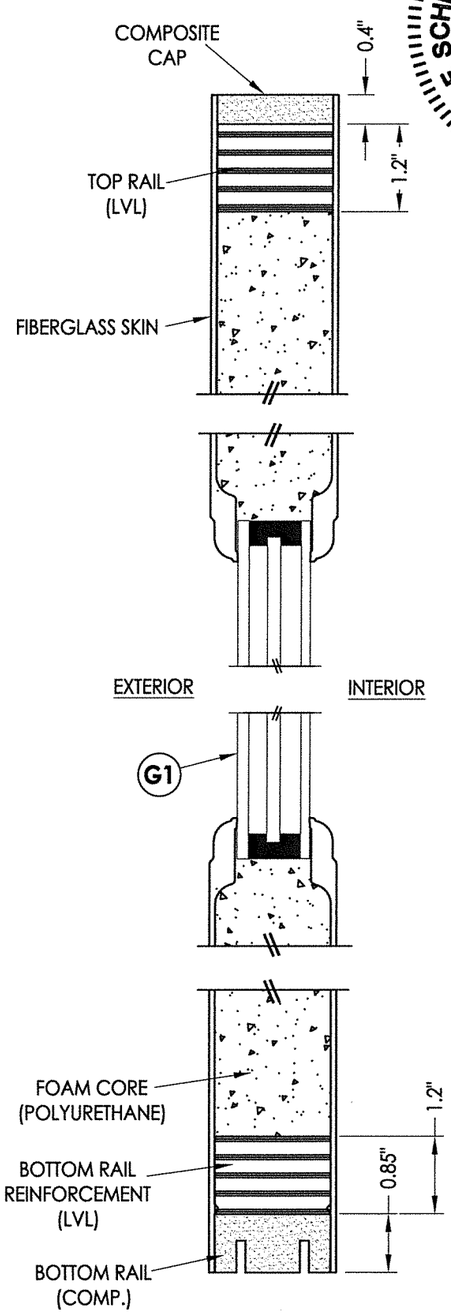

2/2 **VERTICAL CROSS SECTION**

FIBERGLASS DOOR SKIN: MIN. 0.08" THK.
CORE MATERIAL: POLYURETHANE FOAM

L. F. SCHMIDT LICENSE No. 43409 STATE OF FLORIDA PROFESSIONAL ENGINEER

June 7, 2022

Documents Prepared By:
Lyndon F. Schmidt
P.E. No. 43409

BUILDING CONSULTANTS, INC.
P.O. Box 230, Valrico, FL 33595
Phone No.: 813.659.9197
FBPE Registry No. 9813

PRODUCT: STEVES & SONS FIBERGLASS DOOR

PART OR ASSEMBLY: DOOR PANEL DETAILS

NO.	DATE	REVISIONS	BY

DATE: 3/10/22
SCALE: N.T.S.
DWG. BY: RW
CHK. BY: LFS
DRAWING NO.: FL-41467.9
SHEET 2 OF 10

© 2022 R.W. BUILDING CONSULTANTS INC.

Z:\Clients\Steves and Sons - Permanent\A - Florida Product Approvals\FL-41467 REGENCY SERIES\C - Drawings\FL-41467 (2020)\FL-41467.9.dwg

Z:\Clients\Steves and Sons - Permanent\A - Florida Product Approvals\FL-41467 REGENCY SERIES\C - Drawings\FL-41467 (2020)\FL-41467.9.dwg

REGENCY BROOK 3/4 LITE

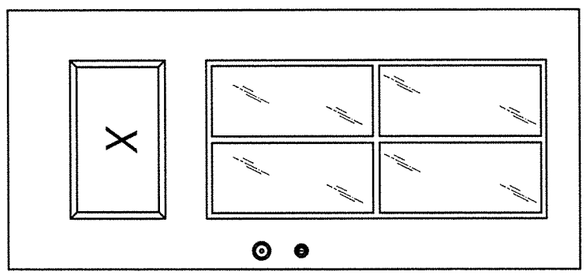

June 7, 2022

L. F. SCHMIDT LICENSE No. 43409 ★ PROFESSIONAL ENGINEER ★ STATE OF FLORIDA

SHEET	3 OF 10
DRAWING NO.:	FL-41467.9
CHK. BY:	LFS
DWG. BY:	RW
SCALE:	N.T.S.
DATE:	3/10/22

NO.	DATE		BY

REVISIONS

PRODUCT:
STEVES & SONS FIBERGLASS DOOR

PART OR ASSEMBLY:
DOOR PANEL OPTIONS

Documents Prepared By:
Lyndon F. Schmidt
P.E. No. 43409

RW BUILDING CONSULTANTS, INC.
P.O. Box 230, Valrico, FL 33595
Phone No.: 813.659.9197
FBPE Registry No. 9813

© 2022 R.W. Building Consultants Inc.

Z:\Clients\Steves and Sons - Permanent\A - Florida Product Approvals\FL-41467 REGENCY SERIES\C - Drawings\FL-41467 (2020)\FL-41467.9.dwg

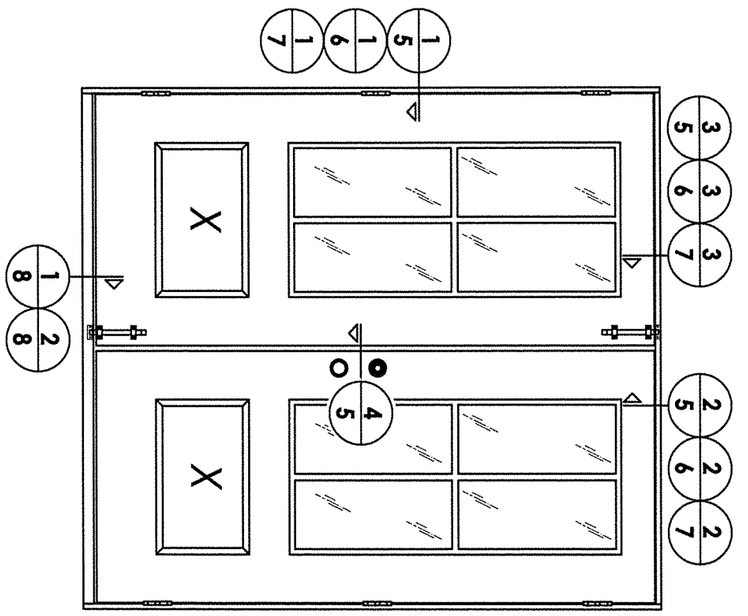

ELEVATION
XX

June 7, 2022

L. F. SCHMIDT
LICENSE
No. 43409
STATE OF FLORIDA
PROFESSIONAL ENGINEER

NO.	DATE		BY
REVISIONS			

PRODUCT:
STEVES & SONS FIBERGLASS DOOR

PART OR ASSEMBLY:
ELEVATIONS

Documents Prepared By:
Lyndon F. Schmidt
P.E. No. 43409

RW BUILDING CONSULTANTS, INC.
P.O. Box 230, Valrico, FL 33595
Phone No.: 813.659.9197
FBPE Registry No. 9813

DATE: 3/10/22
SCALE: N.T.S.
DWG. BY: RW
CHK. BY: LFS
DRAWING NO.: FL-41467.9
SHEET 4 OF 10

© 2022 R.W. Building Consultants Inc.

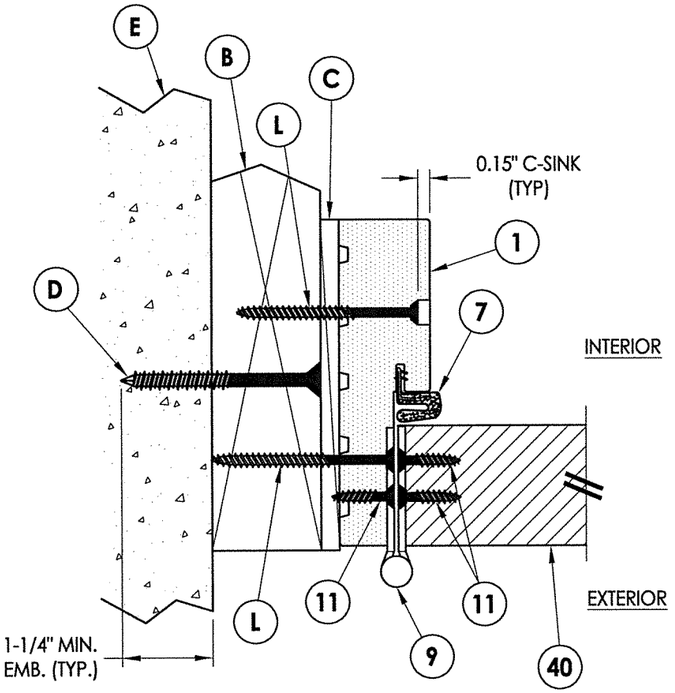

1/5 HORIZONTAL CROSS SECTION
Shown w/ 2X Buck
Outswing shown (Inswing similar)

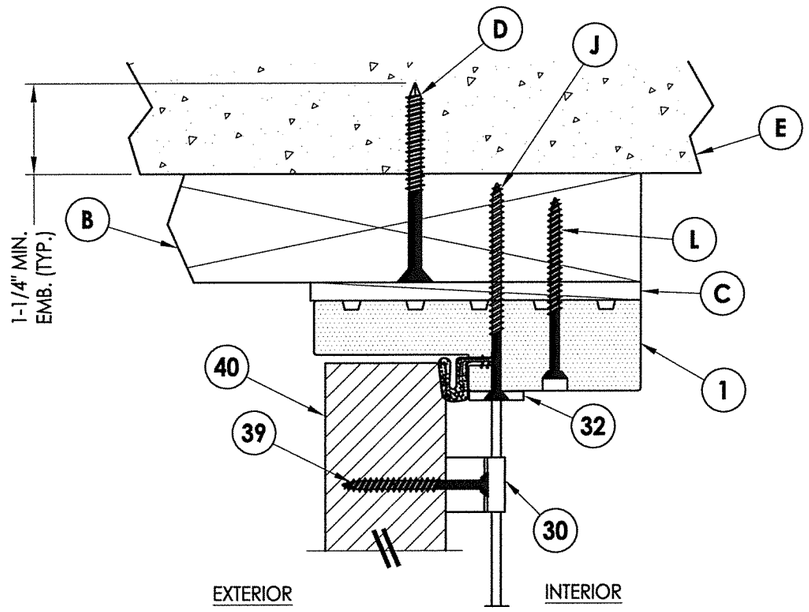

2/5 VERTICAL CROSS SECTION
Shown w/ 2X Buck
Outswing shown

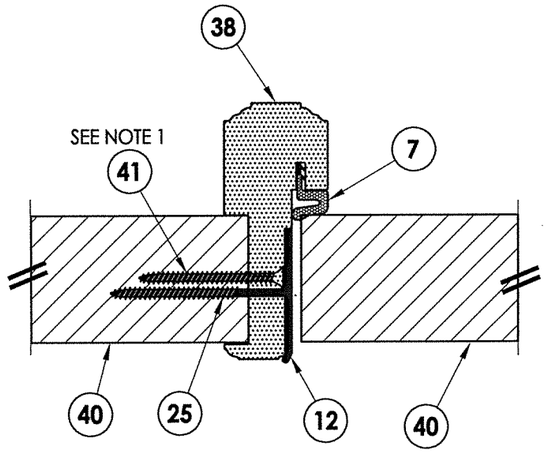

4/5 HORIZONTAL CROSS SECTION
Outswing shown (Inswing similar)

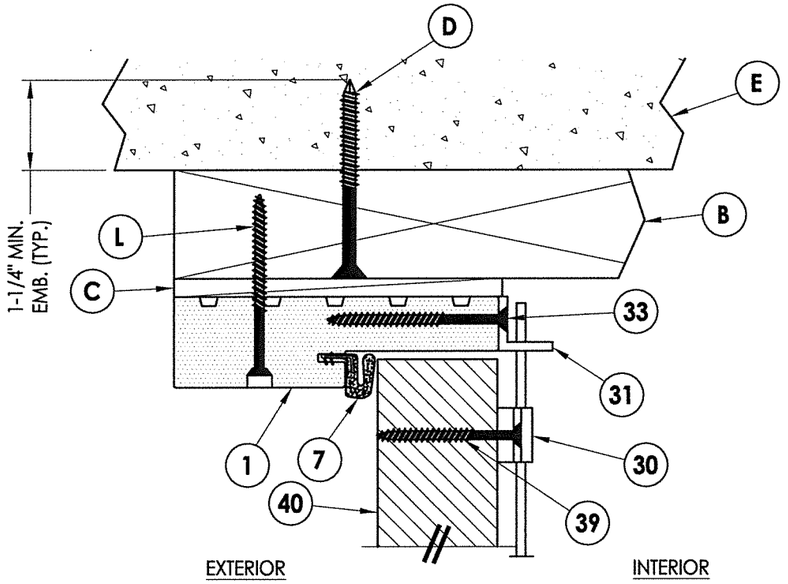

3/5 VERTICAL CROSS SECTION
Shown w/ 2X Buck
Inswing shown

Note:
1. Screws located 8" from each end of astragal plus four (3) more located @ 23", 37" & 48" down from the top of the astragal (5 screws total - countersink 3/16").

I. F. SCHMIDT LICENSE No. 43409 STATE OF FLORIDA PROFESSIONAL ENGINEER

June 7, 2022

Documents Prepared By:
Lyndon F. Schmidt
P.E. No. 43409

BUILDING CONSULTANTS, INC.
P.O. Box 230, Valrico, FL 33595
Phone No.: 813.659.9197
FBPE Registry No. 9813

PRODUCT:
STEVES & SONS
FIBERGLASS DOOR

PART OR ASSEMBLY:
HORIZONTAL & VERTICAL
CROSS SECTIONS (2X BUCK)

NO.	DATE	BY
REVISIONS		

DATE: 3/10/22
SCALE: N.T.S.
DWG. BY: RW
CHK. BY: LFS
DRAWING NO.: FL-41467.9
SHEET 5 OF 10

© 2022 R.W. BUILDING CONSULTANTS INC.

Z:\Clients\Steves and Sons - Permanent\A - Florida Product Approvals\FL-41467 REGENCY SERIES\C - Drawings\FL-41467 (2020)\FL-41467.9.dwg

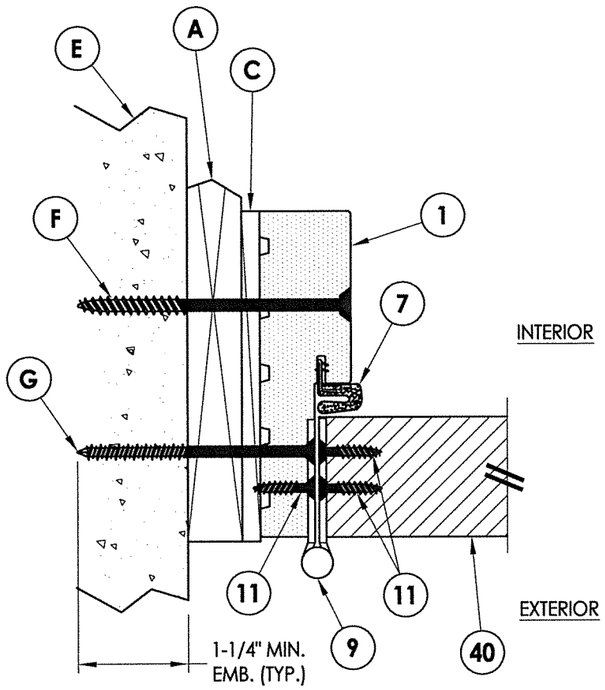

1/6 HORIZONTAL CROSS SECTION
Shown w/ 1X Buck
Outswing shown (Inswing similar)

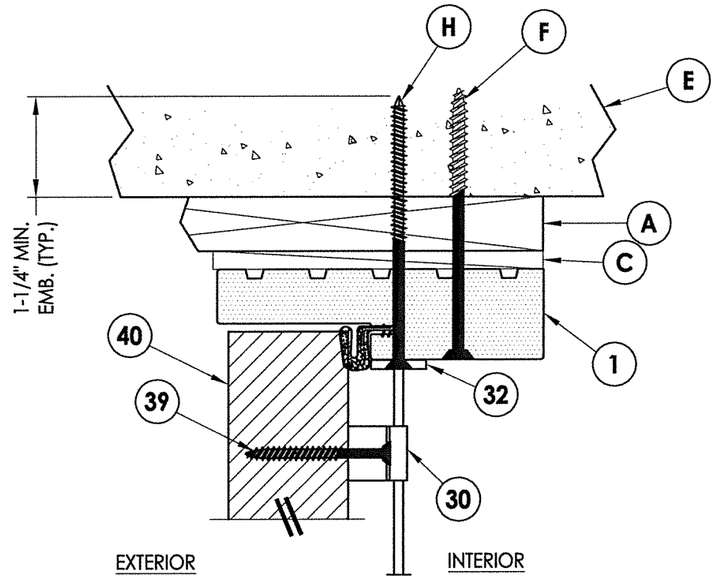

2/6 VERTICAL CROSS SECTION
Shown w/ 1X Buck
Outswing shown

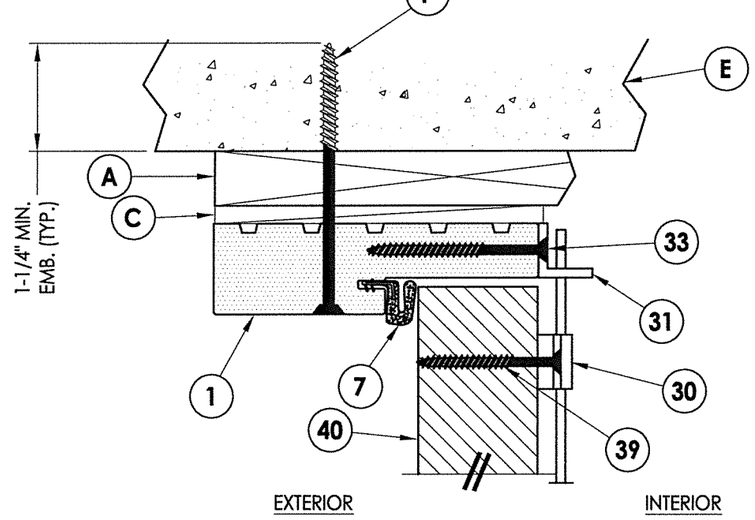

3/6 VERTICAL CROSS SECTION
Shown w/ 1X Buck
Inswing shown

L. F. SCHMIDT LICENSE No. 43409 STATE OF FLORIDA PROFESSIONAL ENGINEER

June 7, 2022

Documents Prepared By:
Lyndon F. Schmidt
P.E. No. 43409

BUILDING CONSULTANTS, INC.
P.O. Box 230, Valrico, FL 33595
Phone No.: 813.659.9197
FBPE Registry No. 9813

PRODUCT:
STEVES & SONS
FIBERGLASS DOOR

PART OR ASSEMBLY:
HORIZONTAL & VERTICAL
CROSS SECTIONS (1X BUCK)

NO.	DATE	REVISIONS	BY

DATE: 3/10/22
SCALE: N.T.S.
DWG. BY: RW
CHK. BY: LFS
DRAWING NO.: FL-41467.9
SHEET 6 OF 10

© 2022 R.W. BUILDING CONSULTANTS INC.

Z:\Clients\Steves and Sons - Permanent\A - Florida Product Approvals\FL-41467 REGENCY SERIES\C - Drawings\FL-41467 (2020)\FL-41467.9.dwg

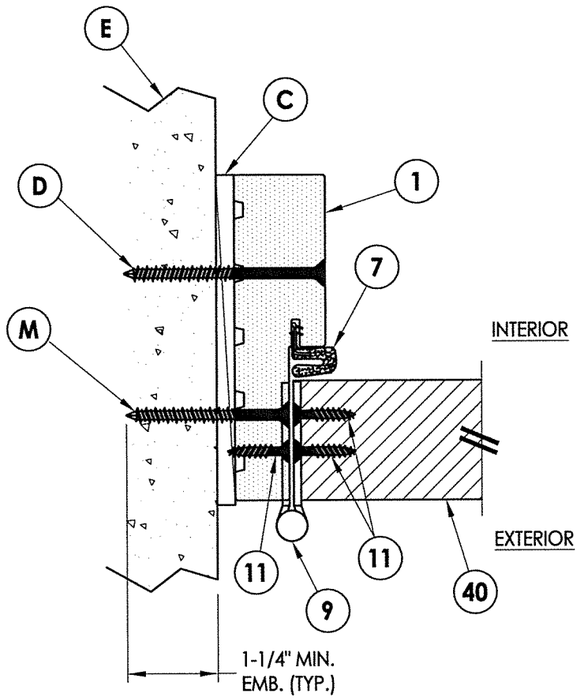

1/7 HORIZONTAL CROSS SECTION
Shown Direct to Masonry
Outswing shown (Inswing similar)

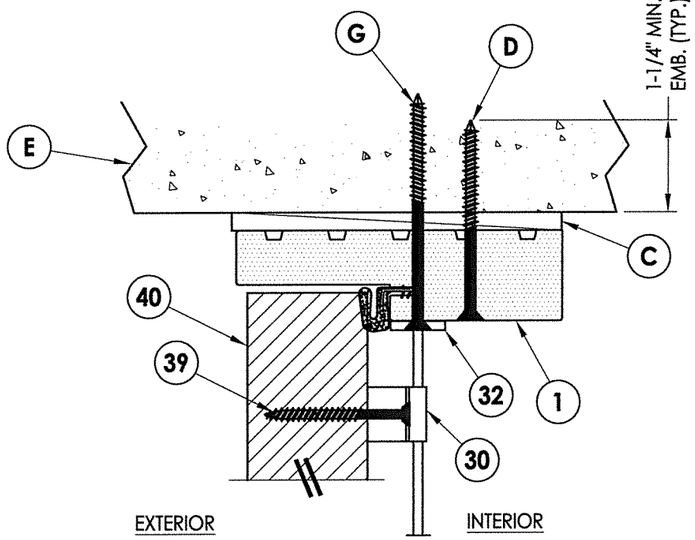

2/7 VERTICAL CROSS SECTION
Shown Direct to Masonry
Outswing shown

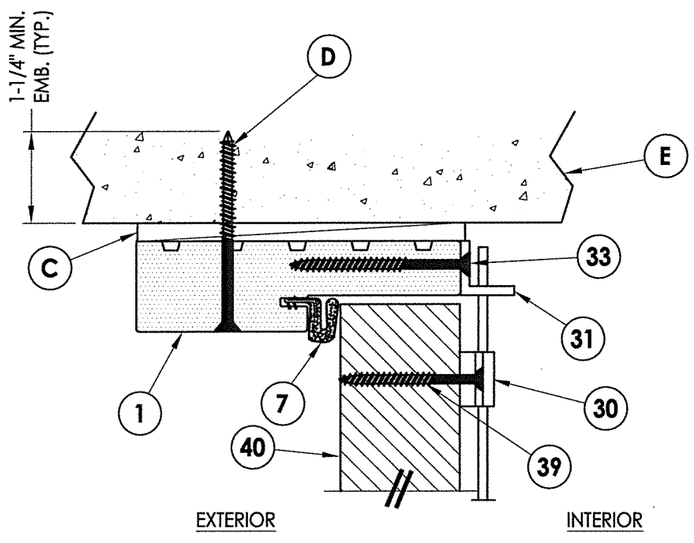

3/7 VERTICAL CROSS SECTION
Shown Direct to Masonry
Inswing shown

L.F. SCHMIDT LICENSE No. 43409 STATE OF FLORIDA PROFESSIONAL ENGINEER

June 7, 2022

Documents Prepared By:
Lyndon F. Schmidt
P.E. No. 43409

RW BUILDING CONSULTANTS, INC.
P.O. Box 230, Valrico, FL 33595
Phone No.: 813.659.9197
FBPE Registry No. 9813

PRODUCT: STEVES & SONS FIBERGLASS DOOR

PART OR ASSEMBLY: HORIZONTAL & VERTICAL CROSS SECTIONS (DIRECT TO MASONRY)

NO.	DATE	BY
REVISIONS		

DATE: 3/10/22
SCALE: N.T.S.
DWG. BY: RW
CHK. BY: LFS
DRAWING NO.: FL-41467.9
SHEET 7 OF 10

© 2022 R.W. BUILDING CONSULTANTS INC.

Z:\Clients\Steves and Sons - Permanent\A - Florida Product Approvals\FL-41467 REGENCY SERIES\C - Drawings\FL-41467 (2020)\FL-41467.9.dwg

1/8 **VERTICAL CROSS SECTION**
Inswing Threshold

2/8 **VERTICAL CROSS SECTION**
Outswing Threshold

L. F. SCHMIDT LICENSE No. 43409 STATE OF FLORIDA PROFESSIONAL ENGINEER

June 7, 2022

Documents Prepared By:
Lyndon F. Schmidt
P.E. No. 43409

BUILDING CONSULTANTS, INC.
P.O. Box 230, Valrico, FL 33595
Phone No.: 813.659.9197
FBPE Registry No. 9813

PRODUCT:
STEVES & SONS FIBERGLASS DOOR

PART OR ASSEMBLY:
VERTICAL CROSS SECTIONS

NO.	DATE	BY
REVISIONS		

DATE: 3/10/22
SCALE: N.T.S.
DWG. BY: RW
CHK. BY: LFS
DRAWING NO.: FL-41467.9
SHEET 8 OF 10

© 2022 R.W. BUILDING CONSULTANTS INC.

Z:\Clients\Steves and Sons - Permanent\A - Florida Product Approvals\FL-41467 REGENCY SERIES\C - ...ERIESC - Drawings\FL-41467 (2020)\FL-41467.9.dwg

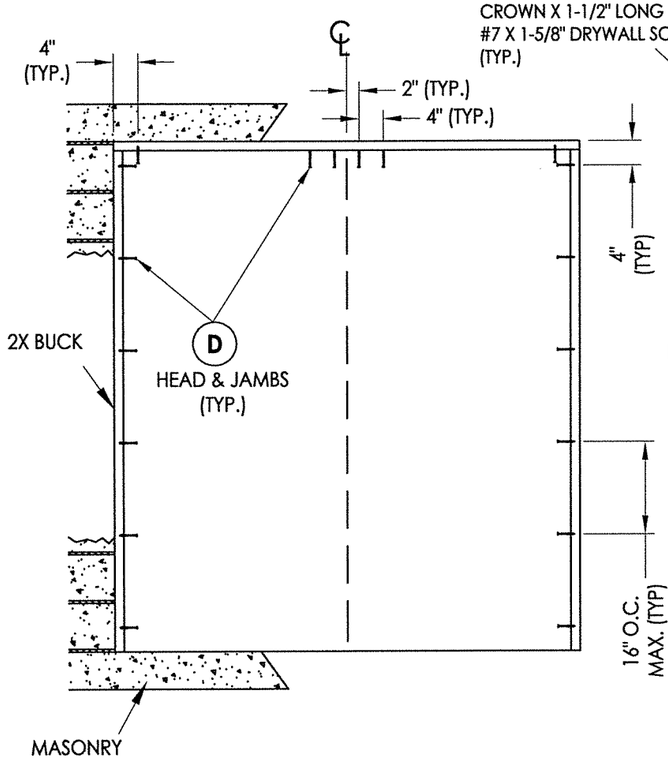

2X BUCK ANCHORING

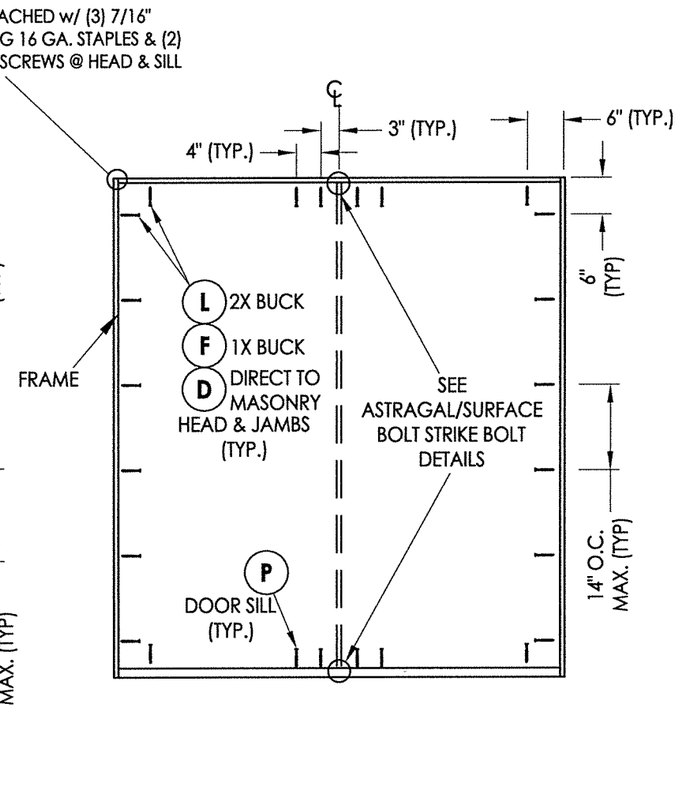

FRAME ANCHORING

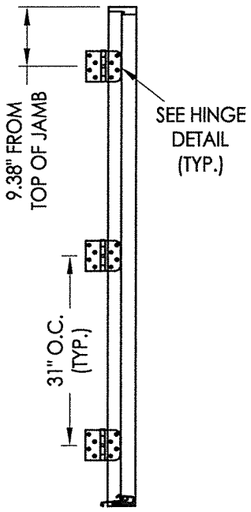

HINGE JAMB

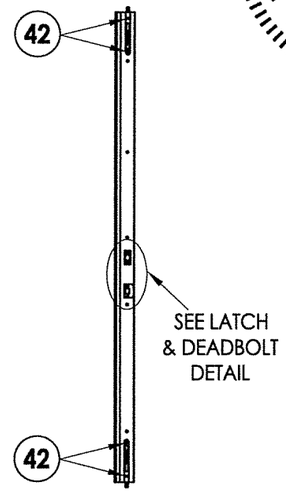

COMPOSITE ASTRAGAL

7" STEEL FLIP LOCK FLUSHBOLT (5/16" Ø) @ EACH END OF ASTRAGAL

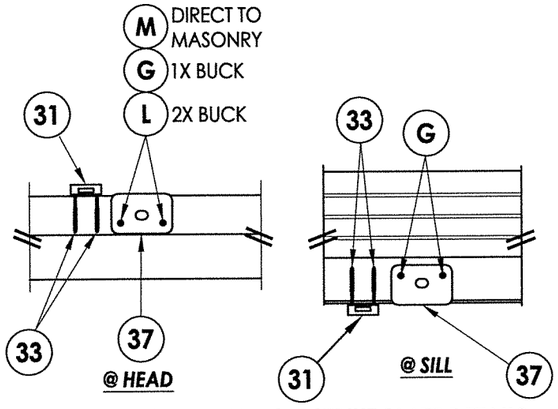

ASTRAGAL/SURFACE BOLT STRIKE PLATE DETAILS

INSWING

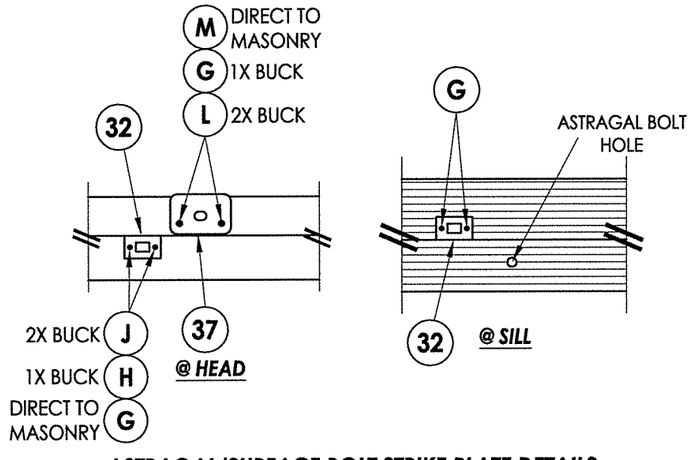

ASTRAGAL/SURFACE BOLT STRIKE PLATE DETAILS

OUTSWING

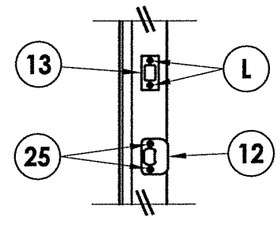

LATCH & DEADBOLT DETAIL

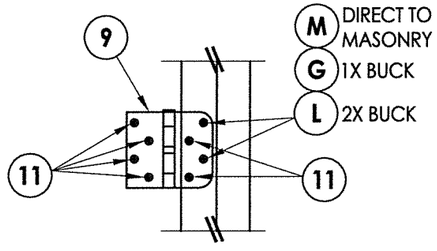

HINGE DETAIL

INSWING

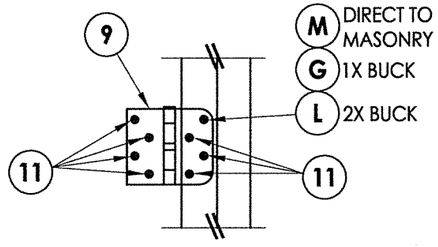

HINGE DETAIL

OUTSWING

HARDWARE DETAILS

L.F. SCHMIDT LICENSE No. 43409 STATE OF FLORIDA PROFESSIONAL ENGINEER

June 7, 2022

Documents Prepared By:
Lyndon F. Schmidt
P.E. No. 4.3409

R.W. BUILDING CONSULTANTS, INC.
P.O. Box 230, Valrico, FL 33595
Phone No.: 813.659.9197
FBPE Registry No. 9813

PRODUCT: STEVES & SONS FIBERGLASS DOOR

PART OR ASSEMBLY: BUCK & FRAME ANCHORING & HARDWARE DETAILS

NO.	DATE	BY
REVISIONS		

DATE: 3/10/22
SCALE: N.T.S.
DWG. BY: RW
CHK. BY: LFS
DRAWING NO.: FL-41467.9
SHEET 9 OF 10

© 2022 R.W. BUILDING CONSULTANTS INC.

Z:\Clients\Steves and Sons - Permanent\A - Florida Product Approvals\FL-41467 REGENCY SERIESC - Drawings\FL-41467 (2020)\FL-41467.9.dwg

BILL OF MATERIALS

ITEM #	DESCRIPTION	MATERIAL
A	1X BUCK (G >= 0.42)	WOOD
B	2X BUCK (G >= 0.42)	WOOD
C	1/4" MAX. SHIM SPACE	-
D	1/4" X 2-3/4" PFH DeWALT OR ITW CONCRETE SCREW	STEEL
E	MASONRY - 3,000 PSI MIN. CONCRETE CONFORMING TO ACI 301 OR HOLLOW BLOCK CONFORMING TO ASTM C90	CONCRETE
F	1/4" X 3-3/4" PFH DeWALT OR ITW CONCRETE SCREW	STEEL
G	3/16" X 3-1/4" PFH ITW CONCRETE SCREW	STEEL
H	3/16" X 3-3/4" PFH ITW CONCRETE SCREW	STEEL
J	#10 X 3" PFH WOOD SCREW	STEEL
L	#10 X 2-1/2" PFH WOOD SCREW (1.15" MIN. EMB.)	STEEL
M	3/16" X 2-1/4" PFH ITW CONCRETE SCREW	STEEL
P	1/4" X 2-1/4" PFH DeWALT OR ITW CONCRETE SCREW	STEEL
1	COMPOSITE JAMB	COMP
7	WEATHERSTRIP	FOAM
8	SWEEP	VINYL
9	4" X 4" HINGE	STEEL
11	#9 X 3/4" PFH WOOD SCREW	STEEL
12	LATCH STRIKE PLATE	STEEL
13	DEADBOLT STRIKE PLATE	STEEL
14	INSWING THRESHOLD	ALUM/COMP
15	OUTSWING THRESHOLD	ALUM/COMP
25	#8 X 2-1/2" PFH WOOD SCREW	STEEL
27	#10 X 2" PFH SMS	STEEL
29	#10 X 3" FH COMPOSITE DECK SCREW	STEEL
30	8" SURFACE BOLT (HAGER 275D)	STEEL
31	SURFACE BOLT GUIDE PLATE	STEEL
32	SURFACE BOLT STRIKE PLATE	STEEL
33	#10 X 2-1/2" PFH WOOD SCREW	STEEL
37	ASTRAGAL STRIKE PLATE	STEEL
38	ASTRAGAL (COMPOSITE)	COMP
39	#10 X 2" FH SMS	STEEL
40	DOOR PANEL	-
41	#7 X 1-5/8" DRYWALL SCREWS	STEEL
42	#8 X 2-1/2" FH SMS	STEEL

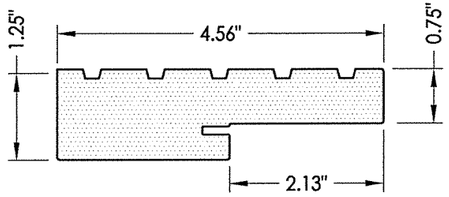

1 COMPOSITE JAMB
WORLDWIDE "4EVER"

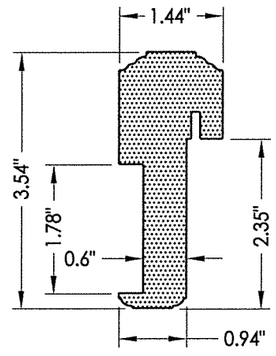

38 COMPOSITE ASTRAGAL

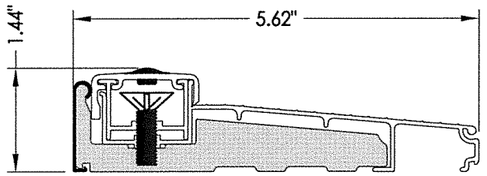

14 INSWING THRESHOLD
Columbia

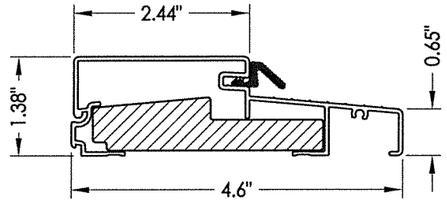

15 OUTSWING THRESHOLD
Columbia

CONCRETE ANCHOR NOTES:

1. *Concrete anchor locations at the corners may be adjusted to maintain the min. edge distance to mortar joints.*
2. *Concrete anchor locations noted as "MAX. ON CENTER" must be adjusted to maintain the min. edge distance to mortar joints, additional concrete anchors may be required to ensure the "MAX. ON CENTER" dimension are not exceeded.*
3. *Concrete anchor table:*

ANCHOR TYPE	ANCHOR SIZE	MIN. EMBEDMENT	MIN. CLEARANCE TO MASONRY EDGE	MIN. CLEARANCE TO ADJACENT ANCHOR
ITW BUILDEX TAPCON®	3/16"	1-1/4"	3"	1-1/2"
	1/4"	1-1/4"	2"	4"
DeWALT ULTRACON®+	1/4"	1-1/4"	1"	4"

WOOD SCREW INSTALLATION NOTES:

1. *Maintain a minimum 5/8" edge distance, 1" end distance, & 1" o.c. spacing of wood screws to prevent the splitting of wood.*

I F. SCHMIDT LICENSE No. 43409 STATE OF FLORIDA PROFESSIONAL ENGINEER

June 7, 2022

Documents Prepared By:
Lyndon F. Schmidt
P.E. No. 43409

BUILDING CONSULTANTS, INC.
P.O. Box 230, Valrico, FL 33595
Phone No.: 813.659.9197
FBPE Registry No. 9813

PRODUCT: STEVES & SONS FIBERGLASS DOOR

PART OR ASSEMBLY: BILL OF MATERIALS & COMPONENTS

NO.	DATE	BY

REVISIONS

DATE: 3/10/22
SCALE: N.T.S.
DWG. BY: RW
CHK. BY: LFS
DRAWING NO.: FL-41467.9
SHEET 10 OF 10

© 2022 R.W. BUILDING CONSULTANTS INC.

Z:\Clients\Steves and Sons - Permanent\A - Florida Product Approvals\FL-41467 REGENCY SERIES\C - Drawings\FL-41467 (2020)\FL-41467.9.dwg