STEVES AND SONS
203 Humble Ave.
San Antonio, TX 78225

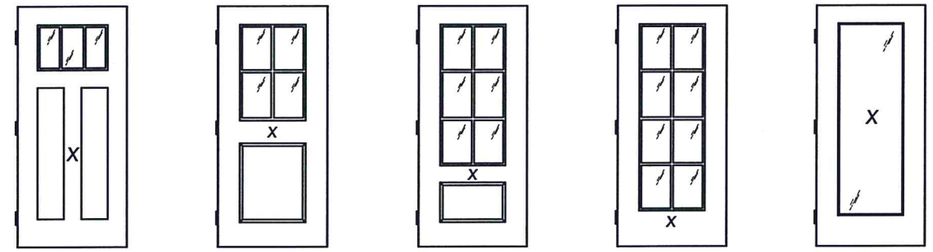

1/4 LITE 3 LITE | 1/2 LITE 4 LITE | 3/4 LITE 6 LITE | FULL LITE 8 LITE | FULL LITE

DIRECT GLAZED FIBERGLASS DOOR
SINGLE w/ TRANSOM
w/ or w/out SIDELITE(S)

INSWING/OUTSWING
"NON-IMPACT"

LEGACY CLEAR COLLECTION
w/ SIMULATED DIVIDED LITES

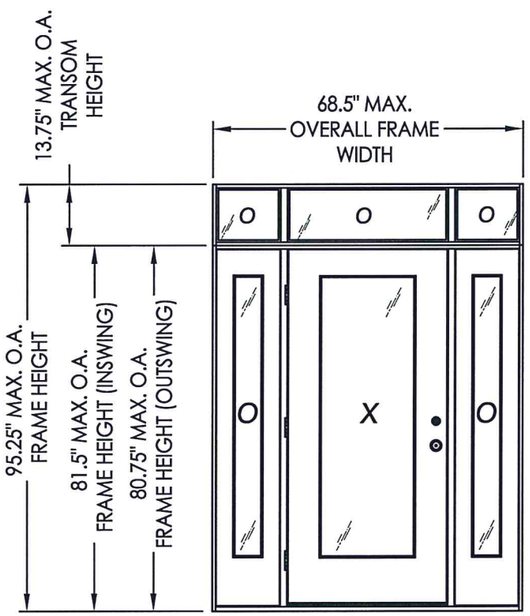

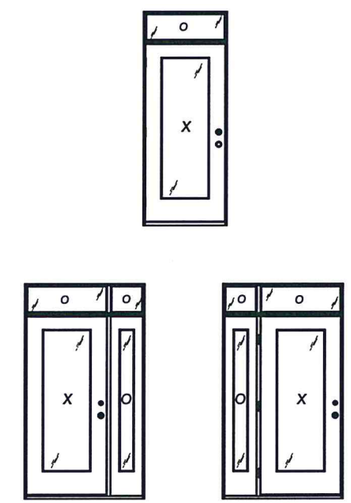

CONTINUOUS HEAD & SILL

GENERAL NOTES

1. This product has been evaluated and is in compliance with the 7th Edition (2020) Florida Building Code (FBC) structural requirements excluding the "High Velocity Hurricane Zone" (HVHZ).
2. Product anchors shall be as listed and spaced as shown on details. Anchor embedment to base material shall be beyond wall dressing or stucco.
3. When used in areas requiring wind borne debris protection this product is required to be protected with an impact resistant covering that complies with FBC Sections 1609.1.2 & R301.2.1.2 of the FBC.
4. For 2x stud framing construction, anchoring of these units shall be the same as that shown for 2x buck masonry construction.
5. Site conditions that deviate from the details of this drawing require further engineering analysis by a licensed engineer or registered architect.

TABLE OF CONTENTS

SHEET #	DESCRIPTION	SHEET #	
1	Typical Elevations, Design Pressures & General Notes	8	Horizontal & Vertical Cross Sections (1X Buck)
2	Door Panel Details	9	Horizontal & Vertical Cross Sections (Direct to Masonry)
3	Sidelite & Transom Panel Details	10	Vertical Cross Sections
4	Panel Options	11	Buck Anchoring
5	Elevations	12	Frame Anchoring & Hardware Details
6	Horizontal Cross Sections	13	Bill of Materials & Components
7	Horizontal & Vertical Cross Sections (2X Buck)		

CONFIGURATION	MAX. FRAME DIMENSION	DESIGN PRESSURE (PSF) INSWING		DESIGN PRESSURE (PSF) OUTSWING	
		POSITIVE	NEGATIVE	POSITIVE	NEGATIVE
O / X	37.5" x 95.25"	+40.0	-40.0	+40.0	-40.0
OOO / OXO, OO / XO, OO / OX	68.5" x 95.25"	+40.0	-40.0	+40.0	-40.0

June 7, 2022

L. F. SCHMIDT LICENSE No. 43409 STATE OF FLORIDA PROFESSIONAL ENGINEER

Documents Prepared By:
Lyndon F. Schmidt
P.E. No. 43409
BUILDING CONSULTANTS, INC.
P.O. Box 230, Valrico, FL 33595
Phone No.: 813.659.9197
FBPE Registry No. 9813

PRODUCT: STEVES & SONS FIBERGLASS DOOR

PART OR ASSEMBLY: TYPICAL ELEVATION, DESIGN PRESSURES & GENERAL NOTES

NO.	DATE	REVISIONS	BY

DATE: 4/20/22
SCALE: N.T.S.
DWG. BY: RW
CHK. BY: LFS
DRAWING NO.: FL-41479.3
SHEET 1 OF 13

© 2022 R.W. BUILDING CONSULTANTS INC.

Z:\Clients\Steves and Sons - Permanent\A - Florida Product Approvals\FL-41479 LEGACY SERIES\C - Drawings\FL-41479 (2020)\FL-41479.3.dwg

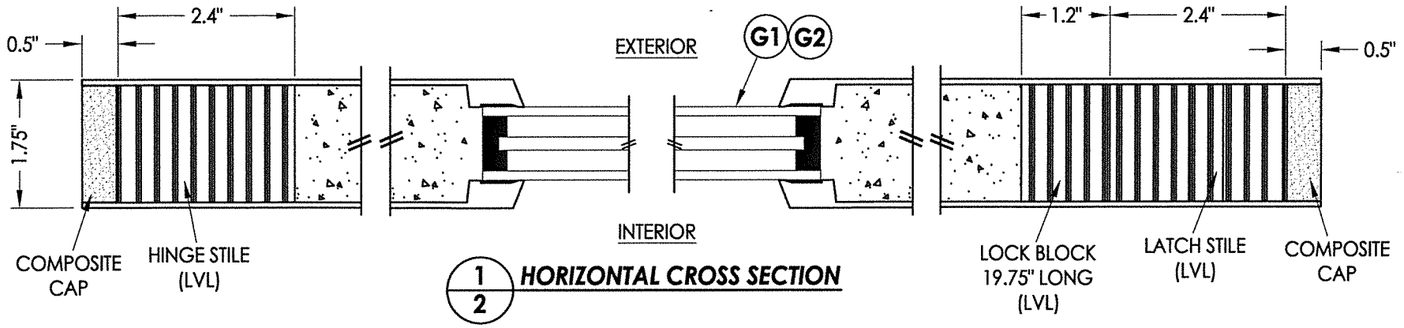

1/2 **HORIZONTAL CROSS SECTION**

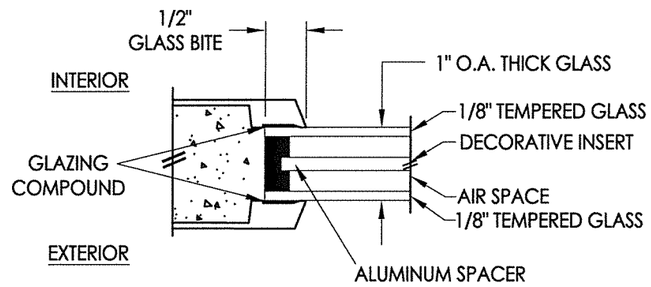

G1 **GLAZING DETAIL**
Full Lite

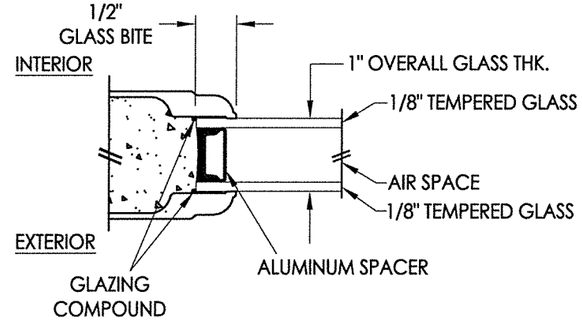

G2 **GLAZING DETAIL**
Simulated Divided Lites

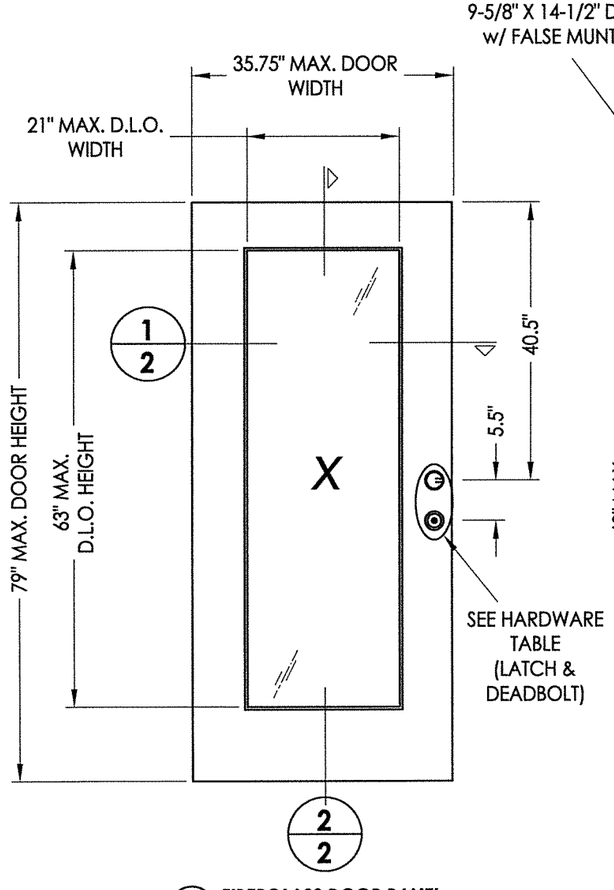

40 **FIBERGLASS DOOR PANEL**
Full Lite

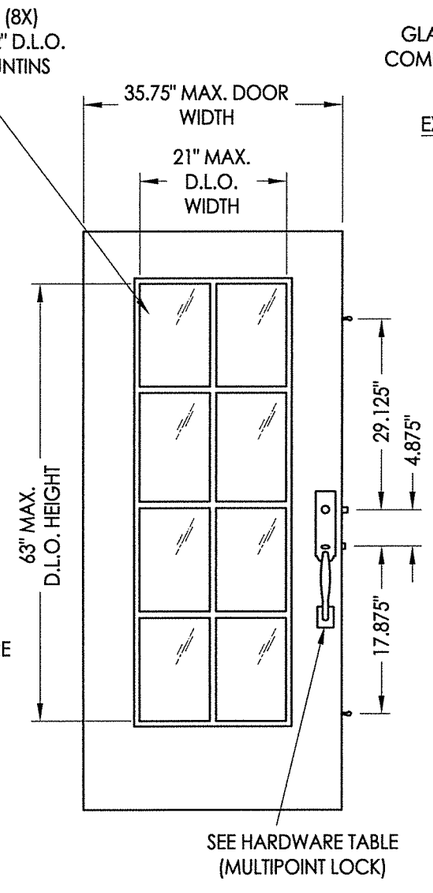

40 **FIBERGLASS DOOR PANEL**
Simulated Divided Lites

FIBERGLASS DOOR SKIN: MIN. 0.08" THK.
CORE MATERIAL: POLYURETHANE FOAM

HARDWARE TABLE		
MANUFACTURER	MODEL	
KWIKSET	LATCH: DEADBOLT:	SIGNATURE SERIES SIGNATURE SERIES (980)
SCHLAGE	LATCH: DEADBOLT:	F51 B60N
ROCKWELL	LATCH: DEADBOLT:	PREMIUM HANDLESET PREMIUM DEADBOLT
ROCKWELL	PREMIUM MULTIPOINT HANDLESET w/ DEADLOCKING TONGUE MULTIPOINT LOCK	

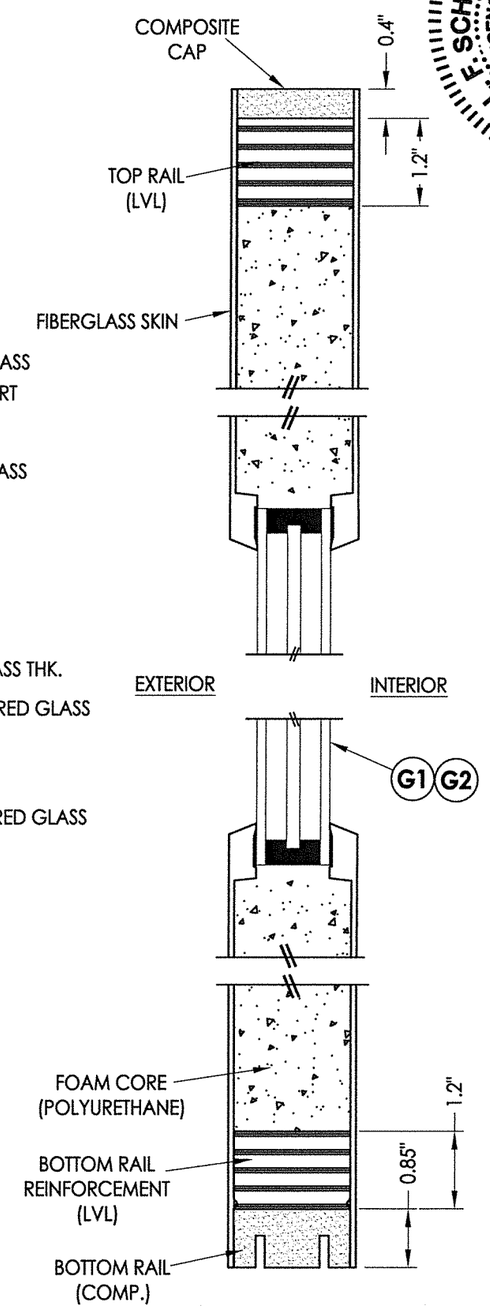

2/2 **VERTICAL CROSS SECTION**

L. F. SCHMIDT
LICENSE
No. 43409
STATE OF FLORIDA
PROFESSIONAL ENGINEER

June 7, 2022

Documents Prepared By:
Lyndon F. Schmidt
P.E. No. 43409

RW BUILDING CONSULTANTS, INC.
P.O. Box 230, Valrico, FL 33595
Phone No.: 813.659.9197
FBPE Registry No. 9813

PRODUCT: STEVES & SONS FIBERGLASS DOOR

PART OR ASSEMBLY: DOOR PANEL DETAILS

NO.	DATE	REVISIONS	BY

DATE: 4/20/22
SCALE: N.T.S.
DWG. BY: RW
CHK. BY: LFS
DRAWING NO.: FL-41479.3
SHEET 2 OF 13

© 2022 R.W. BUILDING CONSULTANTS INC.

Z:\Clients\Steves and Sons - Permanent\A - Florida Product Approvals\FL-41479 LEGACY SERIES\C - Drawings\FL-41479.3.dwg

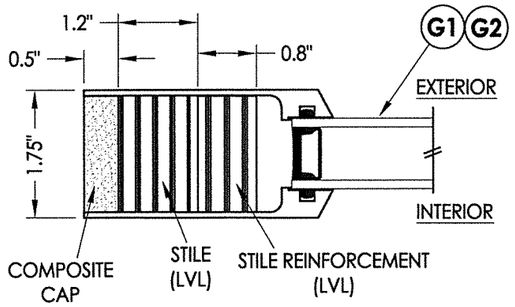

1/3 **HORIZONTAL CROSS SECTION**

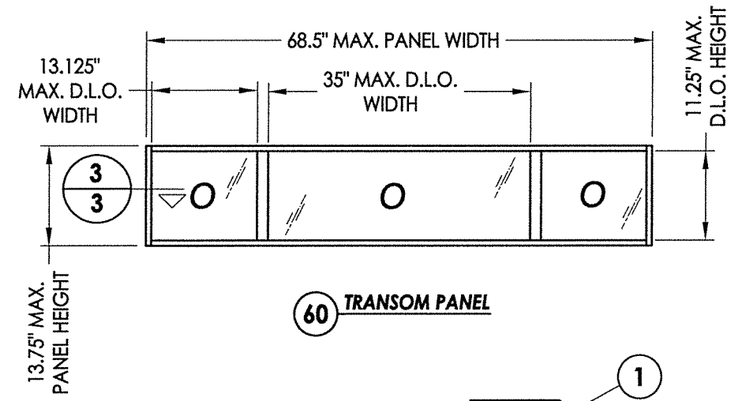

60 **TRANSOM PANEL**

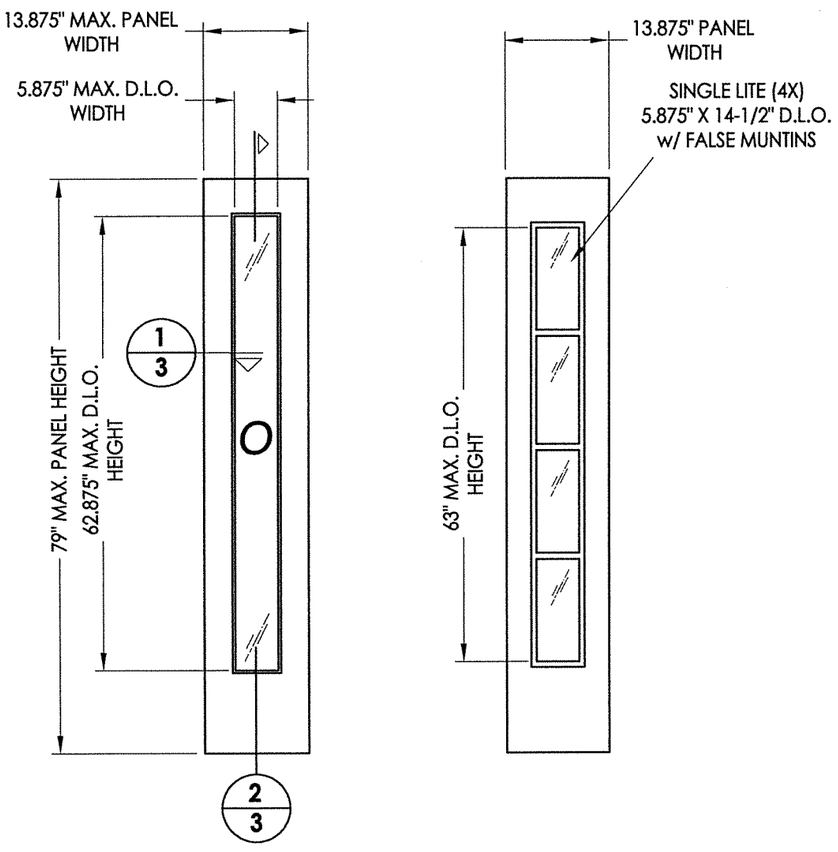

50 **FIBERGLASS SIDELITE PANEL** Full Lite

50 **FIBERGLASS SIDELITE PANEL** Simulated Divided Lites

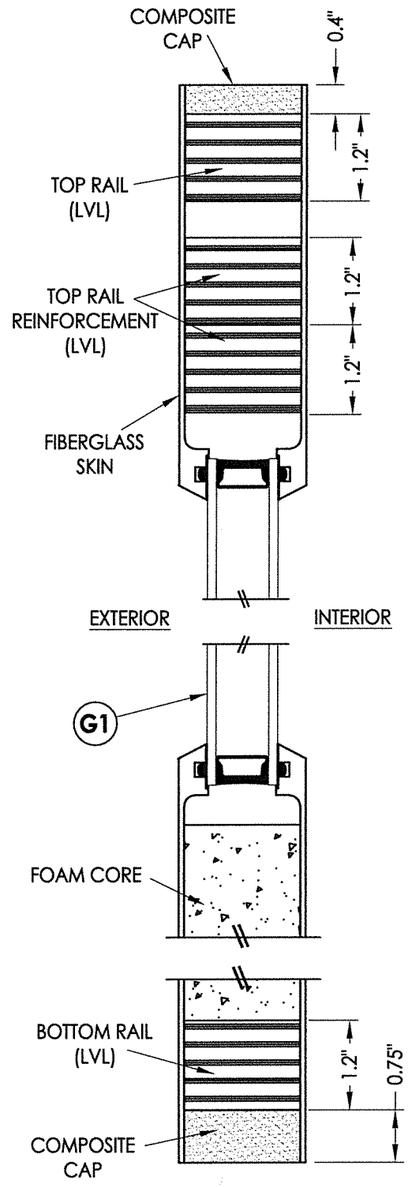

2/3 **VERTICAL CROSS SECTION**

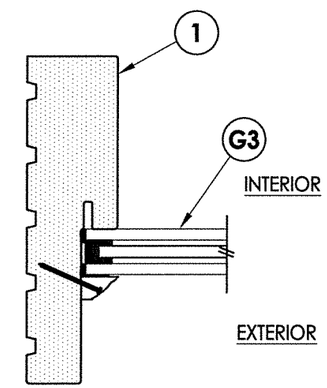

3/3 **HORIZONTAL CROSS SECTION**

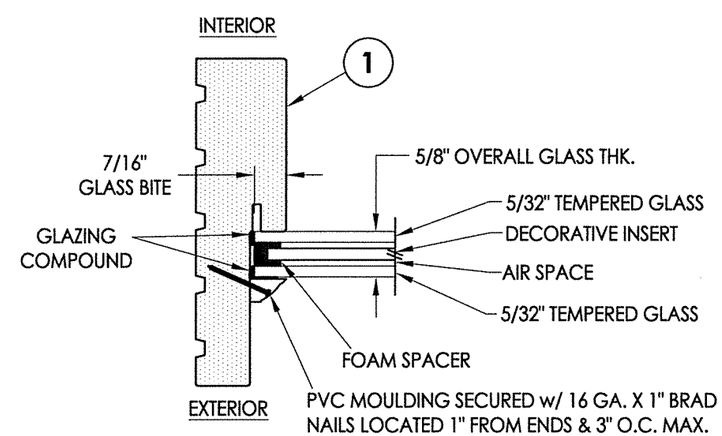

G3 **GLAZING DETAIL** TRANSOM

FIBERGLASS SKIN: 0.08" MIN. THK.
FOAM CORE: POLYURETHANE - 1.9 PCF MIN.)

STATE OF FLORIDA PROFESSIONAL ENGINEER
LYNDON F. SCHMIDT LICENSE No. 43409

June 7, 2022

Documents Prepared By:
Lyndon F. Schmidt
P.E. No. 43409

RW BUILDING CONSULTANTS, INC.
P.O. Box 230, Valrico, FL 33595
Phone No.: 813.659.9197
FBPE Registry No. 9813

PRODUCT: STEVES & SONS FIBERGLASS DOOR

PART OR ASSEMBLY: SIDELITE & TRANSOM PANEL DETAILS

NO.	DATE	REVISIONS	BY

DATE: 4/20/22
SCALE: N.T.S.
DWG. BY: RW
CHK. BY: LFS
DRAWING NO.: FL-41479.3
SHEET 3 OF 13

© 2022 R.W. BUILDING CONSULTANTS INC.

Z:\Clients\Steves and Sons - Permanent\A - Florida Product Approvals\FL-41479 LEGACY SERIES\C - Drawings\FL-41479.3.dwg

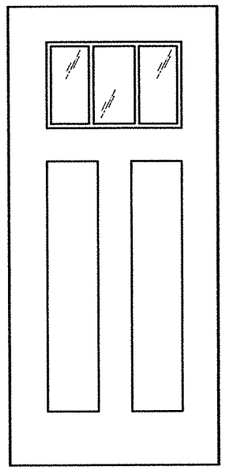

1/4 LITE 3 LITE

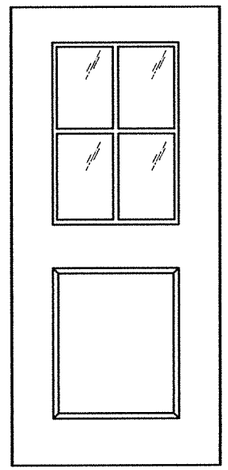

1/2 LITE 4 LITE

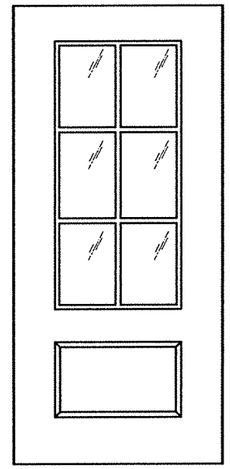

3/4 LITE 6 LITE

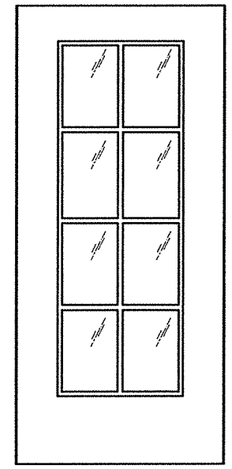

FULL LITE 8 LITE

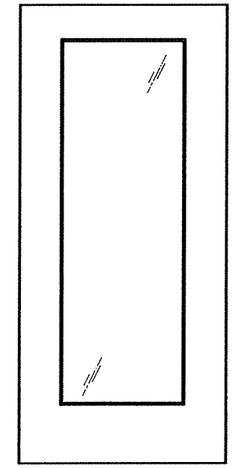

FULL LITE

LEGACY CLEAR COLLECTION

w/ SIMULATED DIVIDED LITES

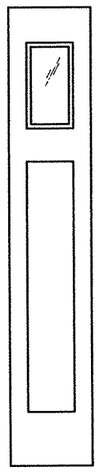

1/4 LITE 1 LITE

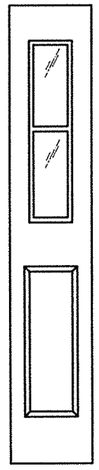

1/2 LITE 2 LITE

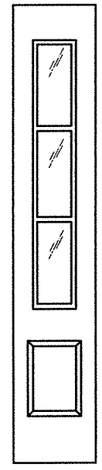

3/4 LITE 3 LITE

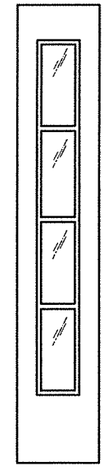

FULL LITE 4 LITE

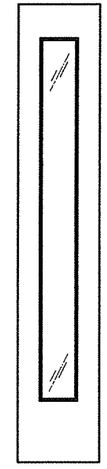

FULL LITE

LEGACY SIDELITES

L. F. SCHMIDT
LICENSE
No. 43409
STATE OF FLORIDA
PROFESSIONAL ENGINEER

June 7, 2022

Documents Prepared By:
Lyndon F. Schmidt
P.E. No. 43409

RW BUILDING CONSULTANTS, INC.
P.O. Box 230, Valrico, FL 33595
Phone No.: 813.659.9197
FBPE Registry No. 9813

PRODUCT: STEVES & SONS FIBERGLASS DOOR

PART OR ASSEMBLY: PANEL OPTIONS

NO.	DATE	REVISIONS	BY

DATE: 4/20/22
SCALE: N.T.S.
DWG. BY: RW
CHK. BY: LFS
DRAWING NO.: FL-41479.3
SHEET 4 OF 13

© 2022 R.W. BUILDING CONSULTANTS INC.

Z:\Clients\Steves and Sons - Permanent\A - Florida Product Approvals\FL-41479 LEGACY SERIES\C - Drawings\FL-41479 (2020)\FL-41479.3.dwg

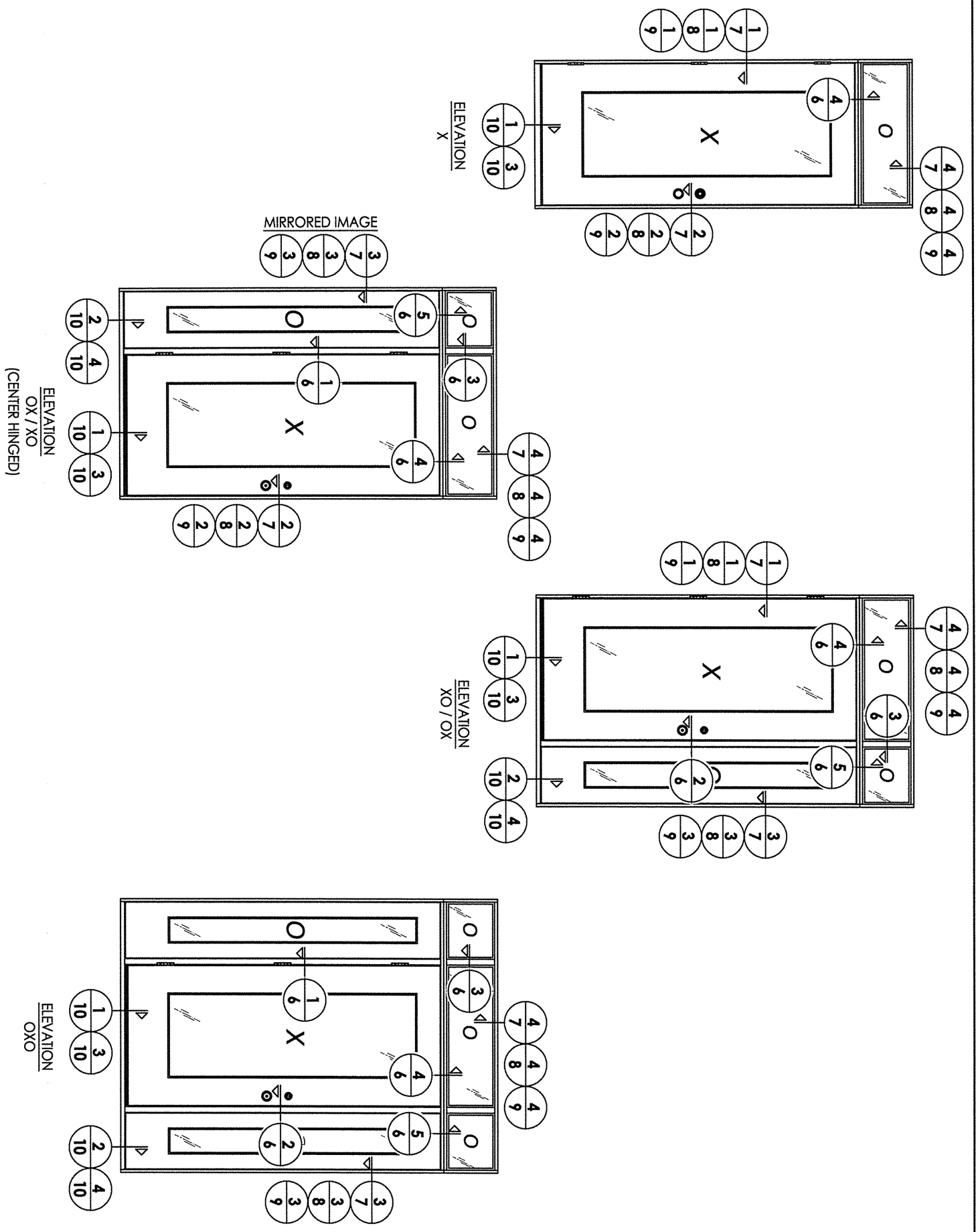

June 7, 2022

L. F. SCHMIDT
LICENSE
No. 43409
STATE OF FLORIDA
PROFESSIONAL ENGINEER

DATE: 4/20/22	NO.	DATE	BY
SCALE: N.T.S.			
DWG. BY: RW			
CHK. BY: LFS			
DRAWING NO.: FL-41479.3			
SHEET 5 OF 13			

REVISIONS

PRODUCT:
STEVES & SONS
FIBERGLASS DOOR

PART OR ASSEMBLY:
ELEVATIONS

Documents Prepared By:
Lyndon F. Schmidt
P.E. No. 43409

RW BUILDING CONSULTANTS, INC.
P.O. Box 230, Valrico, FL 33595
Phone No.: 813.659.9197
FBPE Registry No. 9813

© 2022 R.W. Building Consultants Inc.

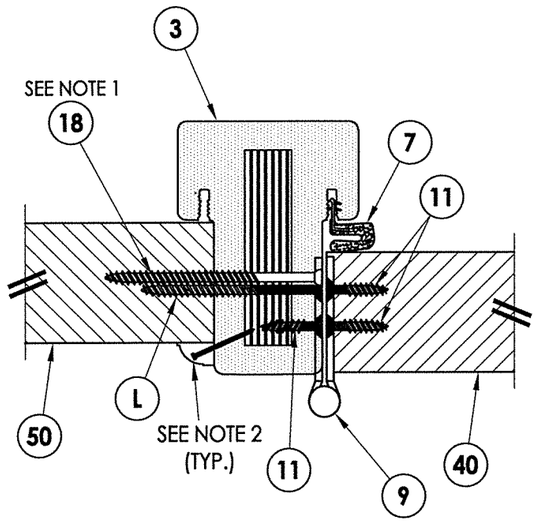

1/6 **HORIZONTAL CROSS SECTION**
Outswing shown (Inswing similar)

INTERIOR

EXTERIOR

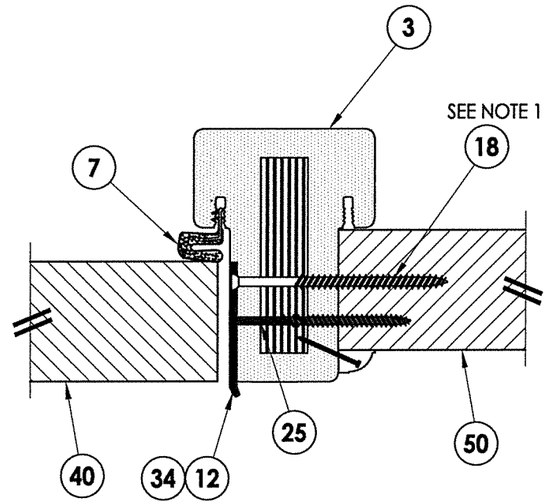

2/6 **HORIZONTAL CROSS SECTION**
Outswing shown (Inswing similar)

INTERIOR

EXTERIOR

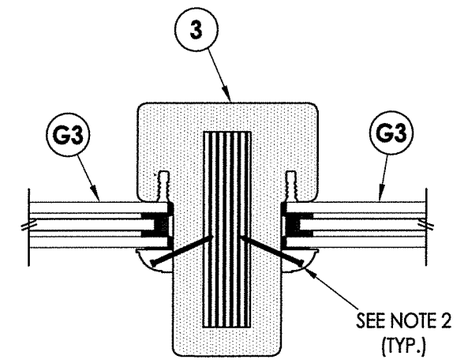

3/6 **HORIZONTAL CROSS SECTION**
Outswing shown (Inswing similar)

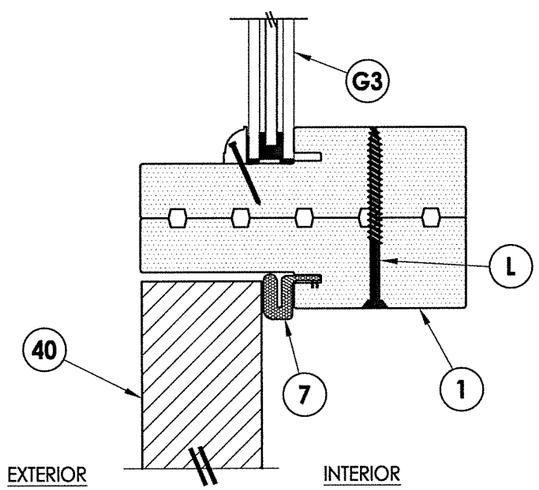

4/6 **VERTICAL CROSS SECTION**
Outswing shown (Inswing similar)

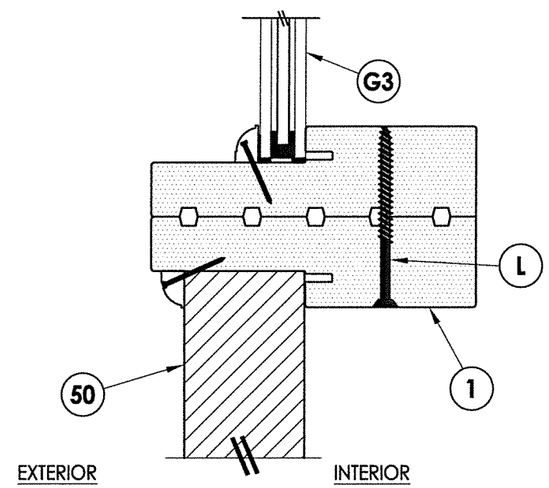

5/6 **VERTICAL CROSS SECTION**
Outswing shown (Inswing similar)

NOTES:
1. Sidelite assembly screws located @ 3" & 19" from each end of mullion (4 total).
2. Moulding secured w/ 16 GA. X 1" brad nails located 1" from ends & 6" o.c. max.

L. F. SCHMIDT
LICENSE
No. 43409
STATE OF FLORIDA
PROFESSIONAL ENGINEER

June 7, 2022

Documents Prepared By:
Lyndon F. Schmidt
P.E. No. 43409

RW BUILDING CONSULTANTS, INC.
P.O. Box 230, Valrico, FL 33595
Phone No.: 813.659.9197
FBPE Registry No. 9813

PRODUCT: STEVES & SONS FIBERGLASS DOOR

PART OR ASSEMBLY: HORIZONTAL & VERTICAL CROSS SECTIONS

NO.	DATE	BY

REVISIONS

DATE: 4/20/22
SCALE: N.T.S.
DWG. BY: RW
CHK. BY: LFS
DRAWING NO.: FL-41479.3
SHEET 6 OF 13

© 2022 R.W. BUILDING CONSULTANTS INC.

Z:\Clients\Steves and Sons - Permanent\A - Florida Product Approvals\FL-41479 LEGACY SERIES\C - Drawings\FL-41479 (2020)\FL-41479.3.dwg

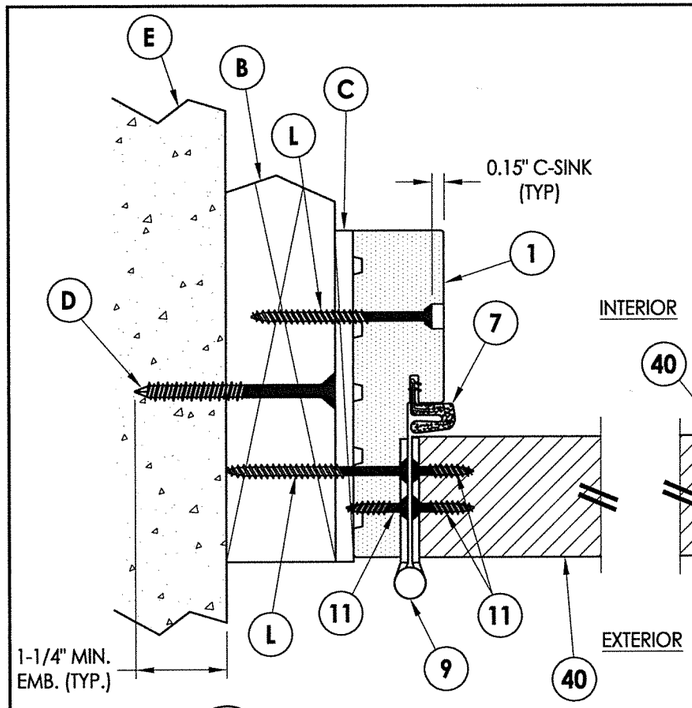

1/7 HORIZONTAL CROSS SECTION
Shown w/ 2X Buck
Outswing shown (Inswing similar)

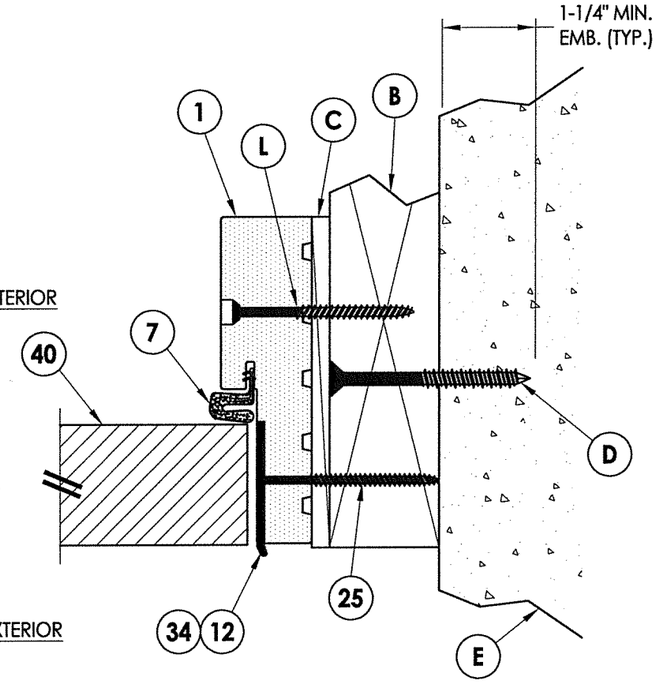

2/7 HORIZONTAL CROSS SECTION
Shown w/ 2X Buck
Outswing shown (Inswing similar)

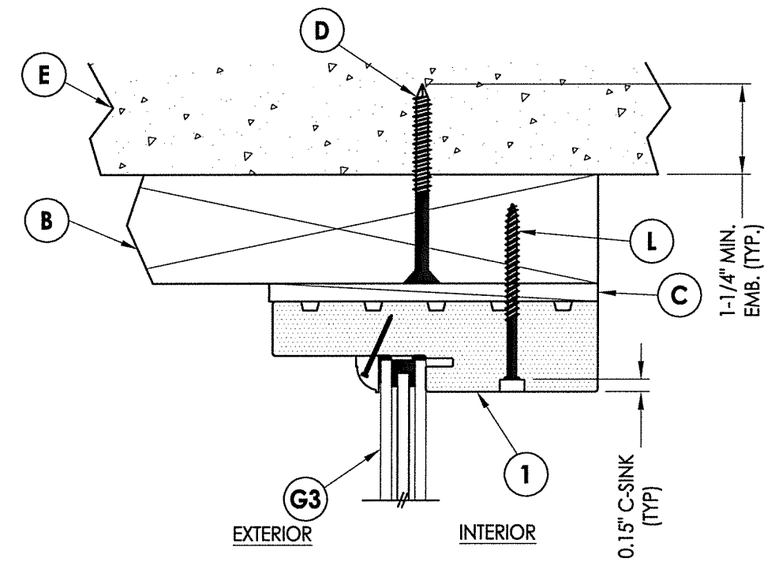

4/7 VERTICAL CROSS SECTION
Shown w/ 2X Buck
Outswing shown (Inswing similar)

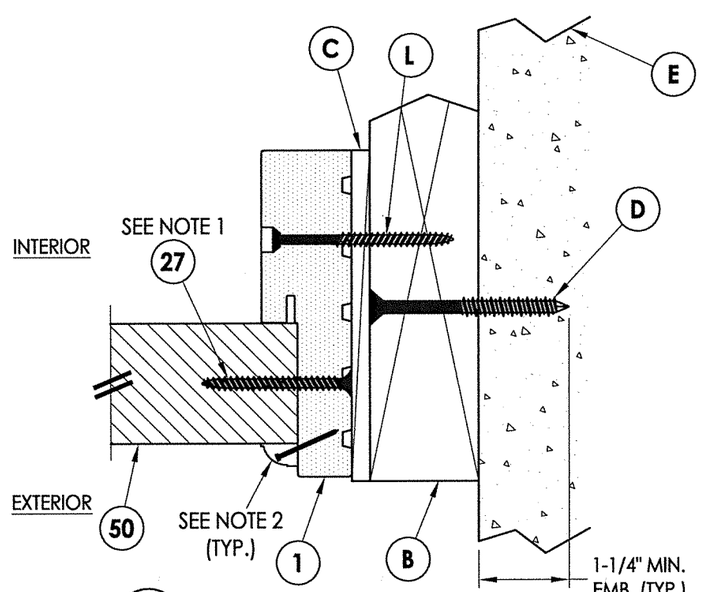

3/7 HORIZONTAL CROSS SECTION
Shown w/ 2X Buck
Outswing shown (Inswing similar)

NOTES:
1. Sidelite assembly screws located 4" from each end plus 4 more equally spaced along jamb (6 total).
2. Moulding secured w/ 16 GA. X 1" brad nails located 1" from ends & 6" o.c. max.

STATE OF FLORIDA
L. F. SCHMIDT
LICENSE
No. 43409
PROFESSIONAL ENGINEER

June 7, 2022

Documents Prepared By:
Lyndon F. Schmidt
P.E. No. 43409

RW BUILDING CONSULTANTS, INC.
P.O. Box 230, Valrico, FL 33595
Phone No.: 813.659.9197
FBPE Registry No. 9813

PRODUCT: STEVES & SONS FIBERGLASS DOOR

PART OR ASSEMBLY: HORIZONTAL & VERTICAL CROSS SECTIONS (2X BUCK)

NO.	DATE	REVISIONS	BY

DATE: 4/20/22
SCALE: N.T.S.
DWG. BY: RW
CHK. BY: LFS
DRAWING NO.: FL-41479.3
SHEET 7 OF 13

© 2022 R.W. BUILDING CONSULTANTS INC.

Z:\Clients\Steves and Sons - Permanent\A - Florida Product Approvals\FL-41479 LEGACY SERIES\C - Drawings\FL-41479 (2020)\FL-41479.3.dwg

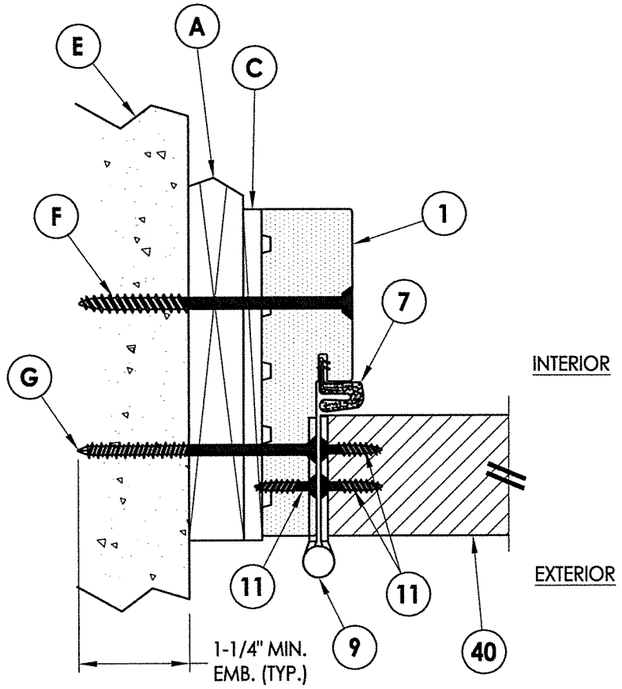

1/8 HORIZONTAL CROSS SECTION
Shown w/ 1X Buck
Outswing shown (Inswing similar)

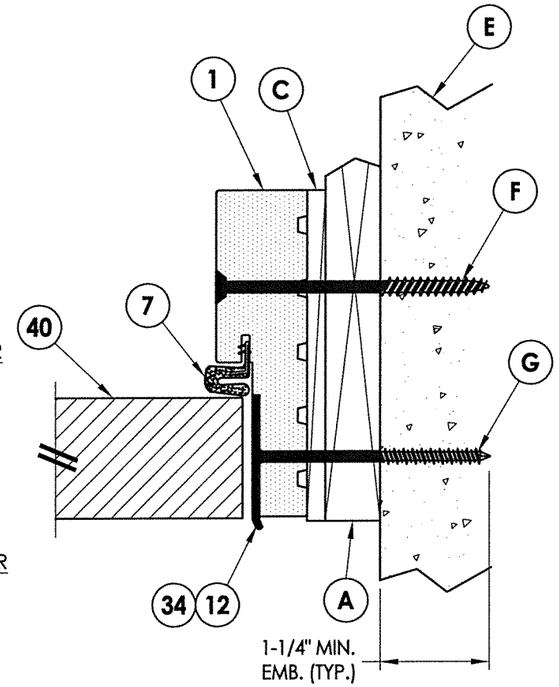

2/8 HORIZONTAL CROSS SECTION
Shown w/ 1X Buck
Outswing shown (Inswing similar)

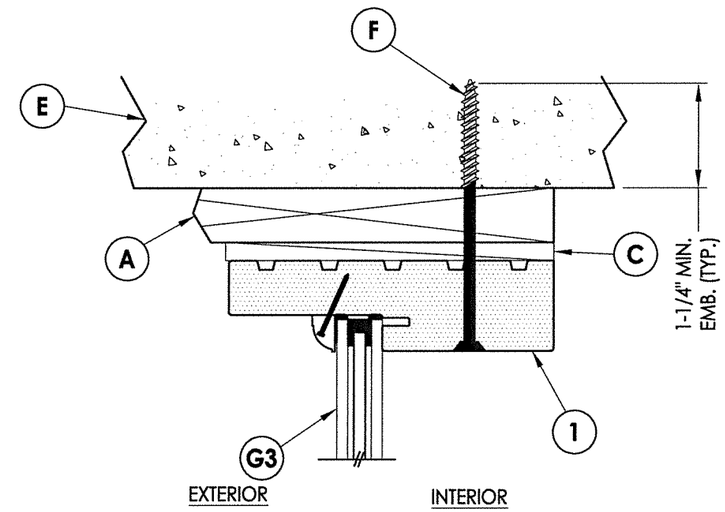

4/8 VERTICAL CROSS SECTION
Shown w/ 1X Buck
Outswing shown (Inswing similar)

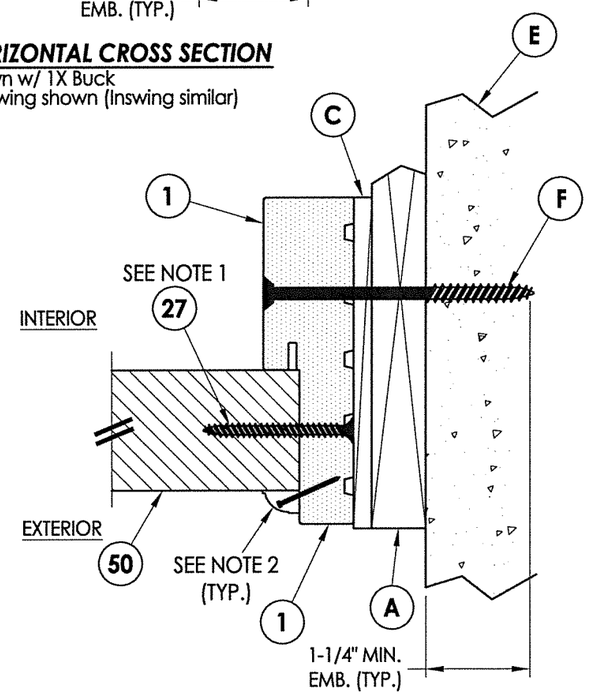

3/8 HORIZONTAL CROSS SECTION
Shown w/ 1X Buck
Outswing shown (Inswing similar)

NOTES:
1. Sidelite assembly screws located 4" from each end plus 4 more equally spaced along jamb (6 total).
2. Moulding secured w/ 16 GA. X 1" brad nails located 1" from ends & 6" o.c. max.

L. F. SCHMIDT LICENSE No. 43409 STATE OF FLORIDA PROFESSIONAL ENGINEER

June 7, 2022

Documents Prepared By:
Lyndon F. Schmidt
P.E. No. 43409

BUILDING CONSULTANTS, INC.
P.O. Box 230, Valrico, FL 33595
Phone No.: 813.659.9197
FBPE Registry No. 9813

PRODUCT: STEVES & SONS FIBERGLASS DOOR

PART OR ASSEMBLY: HORIZONTAL & VERTICAL CROSS SECTIONS (1X BUCK)

NO.	DATE	REVISIONS	BY

DATE: 4/20/22
SCALE: N.T.S.
DWG. BY: RW
CHK. BY: LFS
DRAWING NO.: FL-41479.3
SHEET 8 OF 13

© 2022 R.W. BUILDING CONSULTANTS INC.

Z:\Clients\Steves and Sons - Permanent\A - Florida Product Approvals\FL-41479 LEGACY SERIES\C - Drawings\FL-41479 (2020)\FL-41479.3.dwg

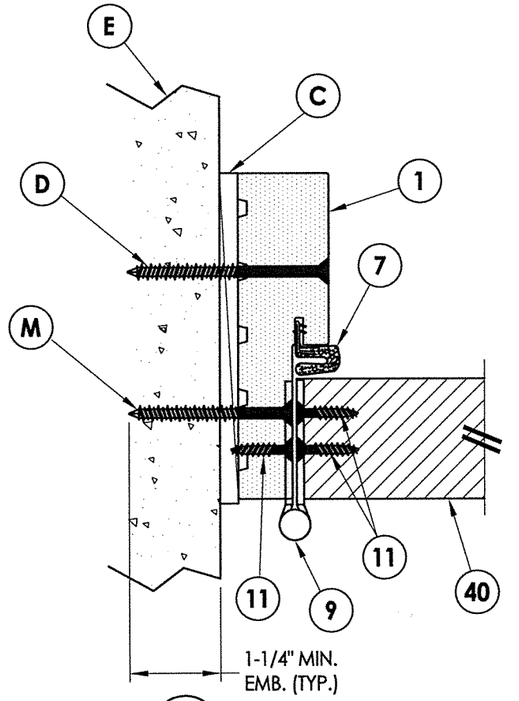

1/9 **HORIZONTAL CROSS SECTION**
Shown Direct to Masonry
Outswing shown (Inswing similar)

INTERIOR

EXTERIOR

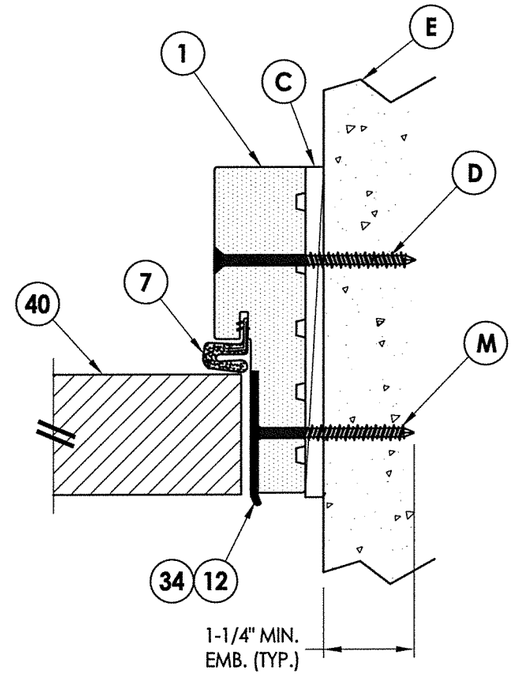

2/9 **HORIZONTAL CROSS SECTION**
Shown Direct to Masonry
Outswing shown (Inswing similar)

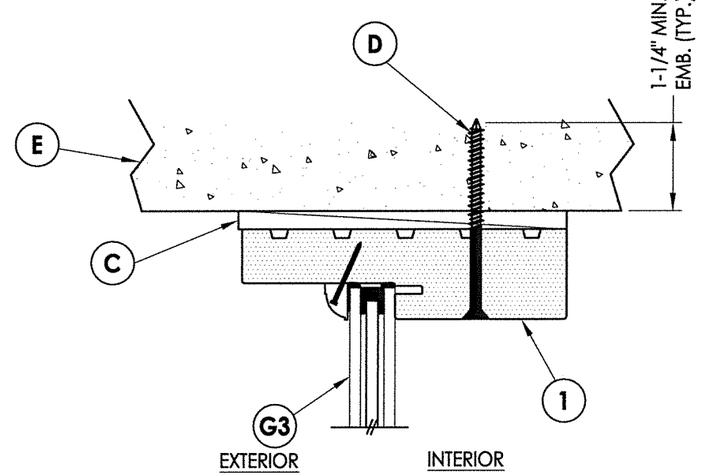

4/9 **VERTICAL CROSS SECTION**
Shown Direct to Masonry
Outswing shown (Inswing similar)

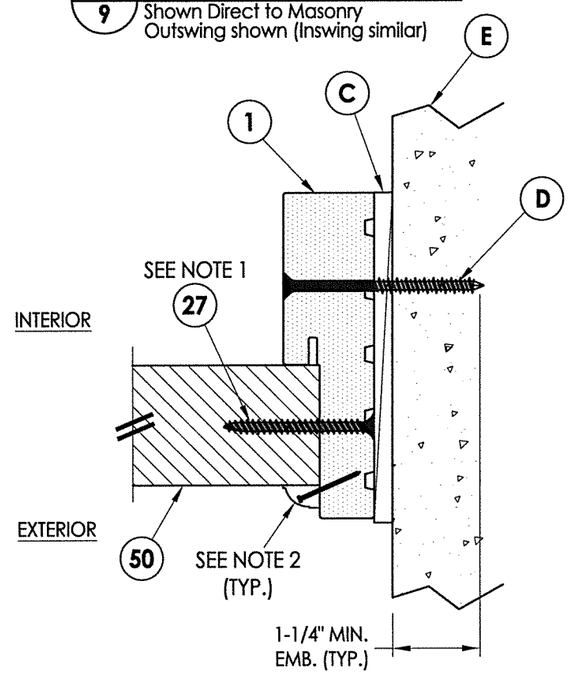

3/9 **HORIZONTAL CROSS SECTION**
Shown Direct to Masonry
Outswing shown (Inswing similar)

NOTES:
1. Sidelite assembly screws located 4" from each end plus 4 more equally spaced along jamb (6 total).
2. Moulding secured w/ 16 GA. X 1" brad nails located 1" from ends & 6" o.c. max.

STATE OF FLORIDA
L. F. SCHMIDT
LICENSE No. 43409
PROFESSIONAL ENGINEER

June 7, 2022

Documents Prepared By:
Lyndon F. Schmidt
P.E. No. 43409

BUILDING CONSULTANTS, INC.
P.O. Box 230, Valrico, FL 33595
Phone No.: 813.659.9197
FBPE Registry No. 9813

PRODUCT: STEVES & SONS FIBERGLASS DOOR

PART OR ASSEMBLY: HORIZONTAL & VERTICAL CROSS SECTIONS (DIRECT TO MASONRY)

NO.	DATE	REVISIONS	BY

DATE: 4/20/22
SCALE: N.T.S.
DWG. BY: RW
CHK. BY: LFS
DRAWING NO.: FL-41479.3
SHEET 9 OF 13

© 2022 R.W. BUILDING CONSULTANTS INC.

Z:\Clients\Steves and Sons - Permanent\A - Florida Product Approvals\FL-41479 LEGACY SERIES\C - Drawings\FL-41479 (2020)\FL-41479.3.dwg

NOTE:
1. Anchor @ sill is not required for single door (X) only.

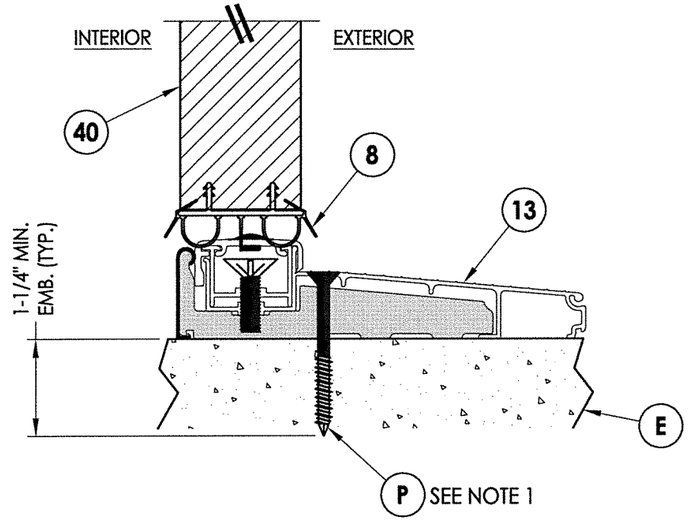

1/10 **VERTICAL CROSS SECTION**
Inswing Threshold

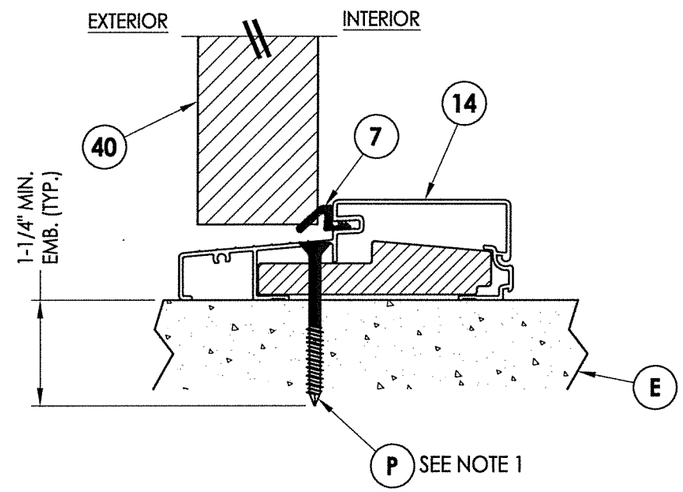

2/10 **VERTICAL CROSS SECTION**
Outswing Threshold

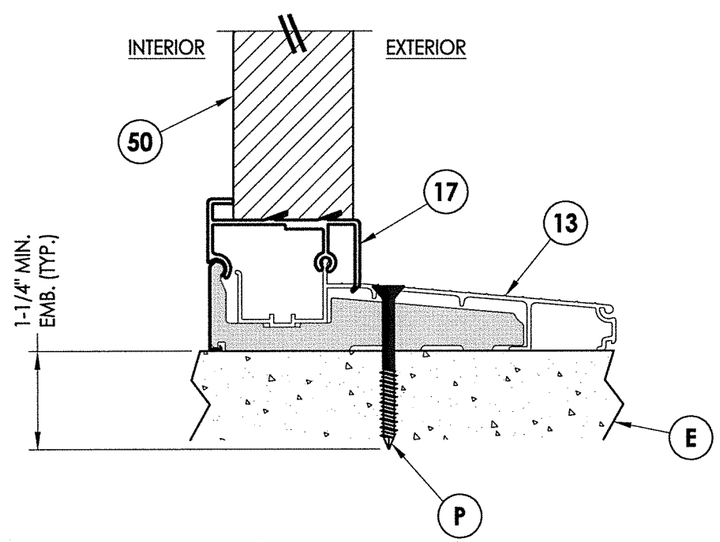

3/10 **VERTICAL CROSS SECTION**
Inswing Threshold

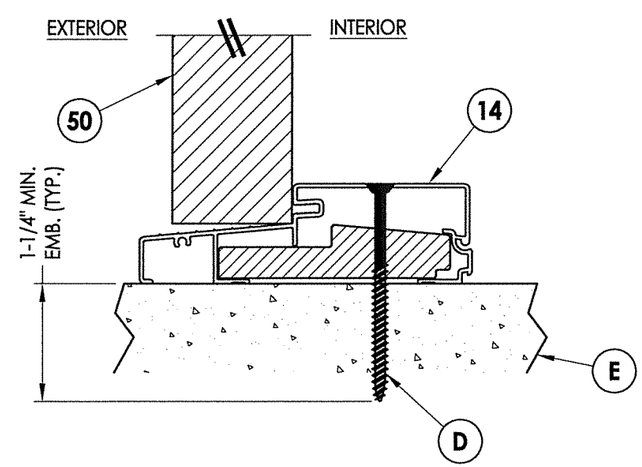

4/10 **VERTICAL CROSS SECTION**
Outswing Threshold

L. F. SCHMIDT LICENSE No. 43409 STATE OF FLORIDA PROFESSIONAL ENGINEER

June 7, 2022

Documents Prepared By:
Lyndon F. Schmidt
P.E. No. 43409

RW BUILDING CONSULTANTS, INC.
P.O. Box 230, Valrico, FL 33595
Phone No.: 813.659.9197
FBPE Registry No. 9813

PRODUCT: STEVES & SONS FIBERGLASS DOOR

PART OR ASSEMBLY: VERTICAL CROSS SECTIONS

REVISIONS

NO.	DATE	BY

DATE: 4/20/22
SCALE: N.T.S.
DWG. BY: RW
CHK. BY: LFS
DRAWING NO.: FL-41479.3
SHEET 10 OF 13

© 2022 R.W. BUILDING CONSULTANTS INC.

Z:\Clients\Steves and Sons - Permanent\A - Florida Product Approvals\FL-41479 LEGACY SERIES\C - Drawings\FL-41479 (2020)\FL-41479.3.dwg

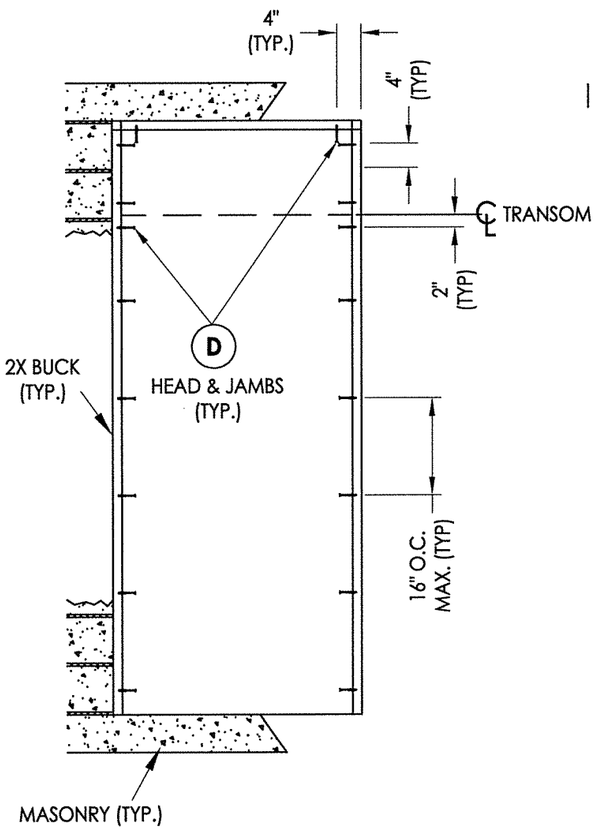

X

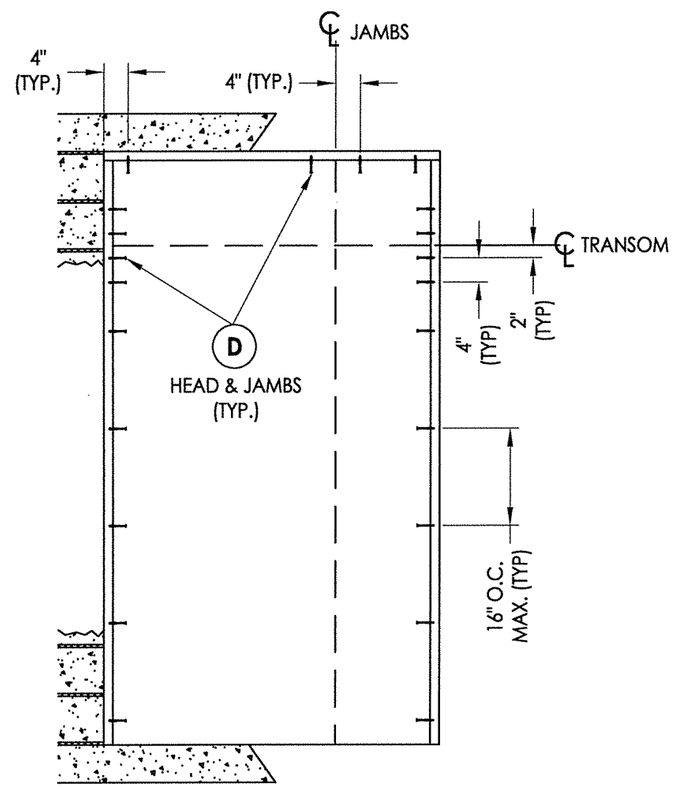

XO, OX

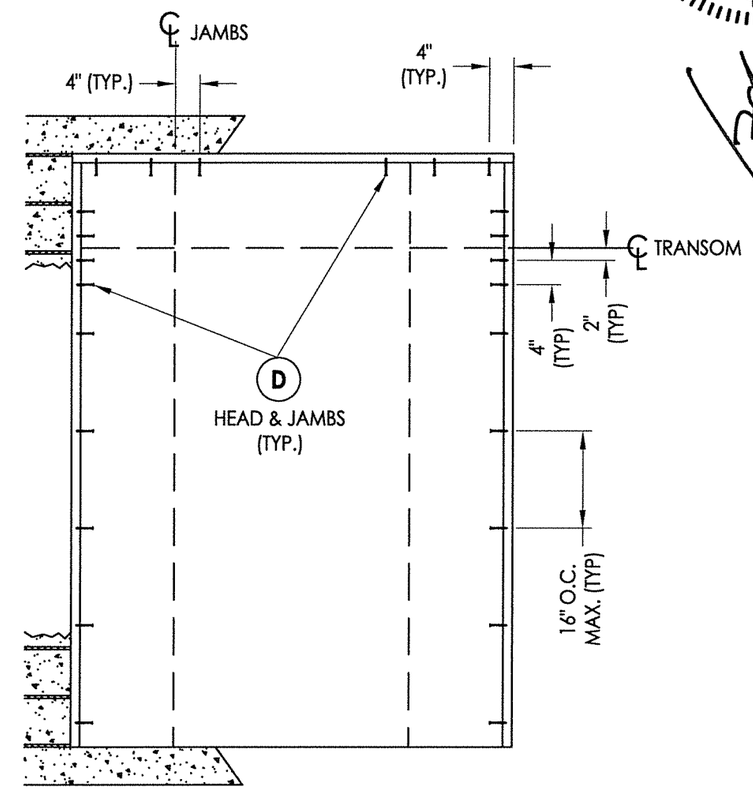

OXO

2X BUCK ANCHORING

L. F. SCHMIDT LICENSE No. 43409 STATE OF FLORIDA PROFESSIONAL ENGINEER

June 7, 2022

Documents Prepared By:
Lyndon F. Schmidt
P.E. No. 43409

BUILDING CONSULTANTS, INC.
P.O. Box 230, Valrico, FL 33595
Phone No.: 813.659.9197
FBPE Registry No. 9813

PRODUCT: STEVES & SONS FIBERGLASS DOOR

PART OR ASSEMBLY: BUCK ANCHORING

NO.	DATE	REVISIONS	BY

DATE: 4/20/22
SCALE: N.T.S.
DWG. BY: RW
CHK. BY: LFS
DRAWING NO.: FL-41479.3
SHEET 11 OF 13

© 2022 R.W. BUILDING CONSULTANTS INC.

Z:\Clients\Steves and Sons - Permanent\A - Florida Product Approvals\FL-41479 LEGACY SERIES\C - Drawings\FL-41479 (2020)\FL-41479.3.dwg

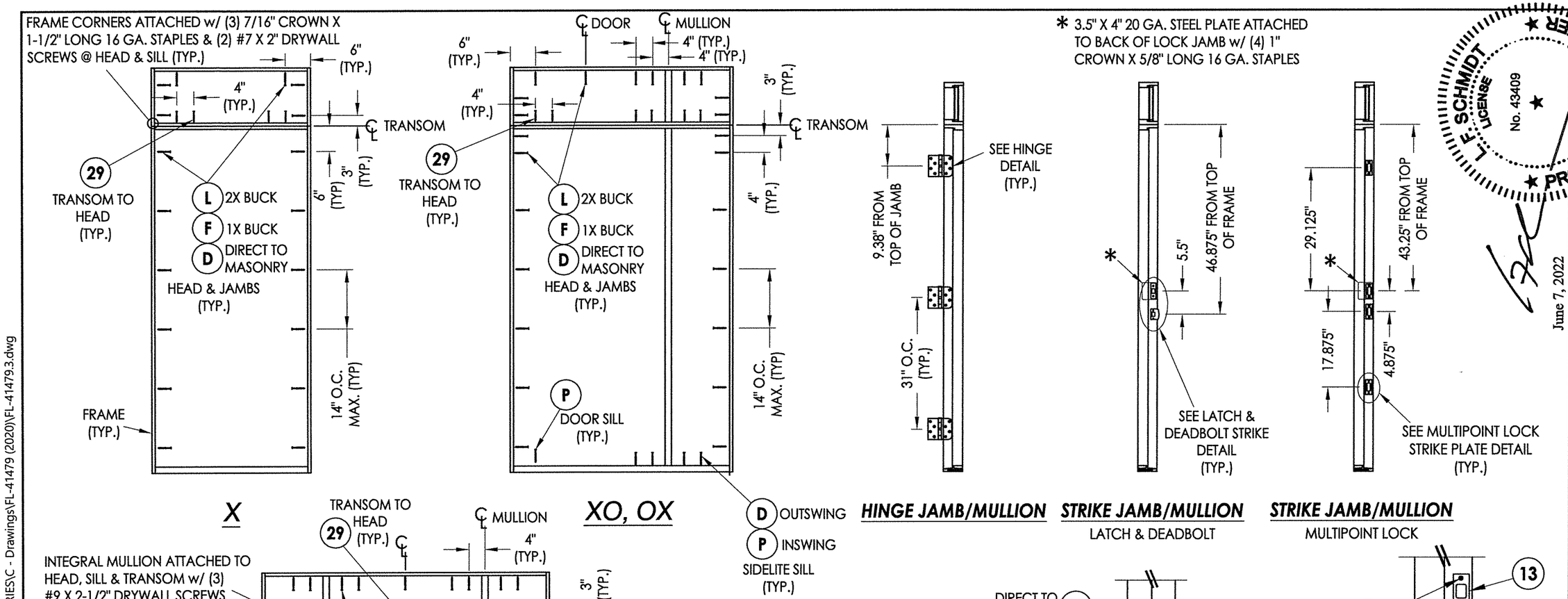

X

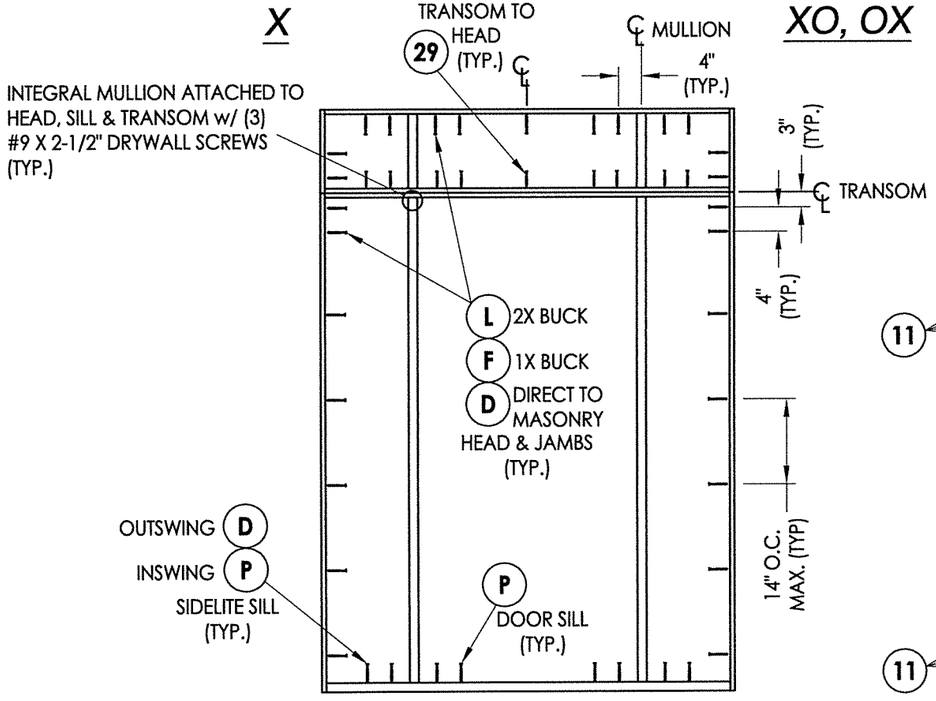

XO, OX

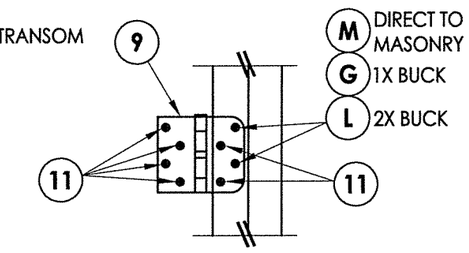

HINGE DETAIL
INSWING

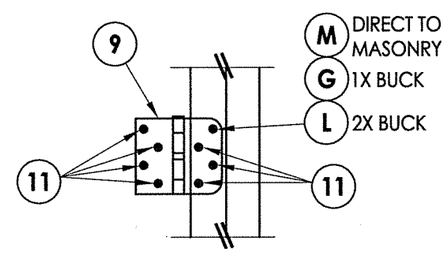

HINGE DETAIL
OUTSWING

OXO
FRAME ANCHORING

HINGE JAMB/MULLION

STRIKE JAMB/MULLION
LATCH & DEADBOLT

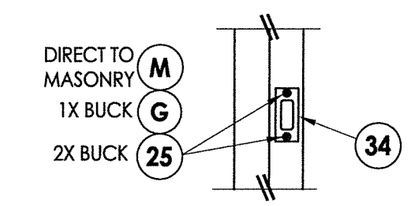

ROCKWELL MULTIPOINT LOCK HARDWARE

STRIKE JAMB/MULLION
MULTIPOINT LOCK

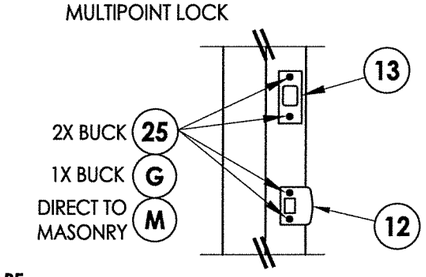

ROCKWELL HARDWARE

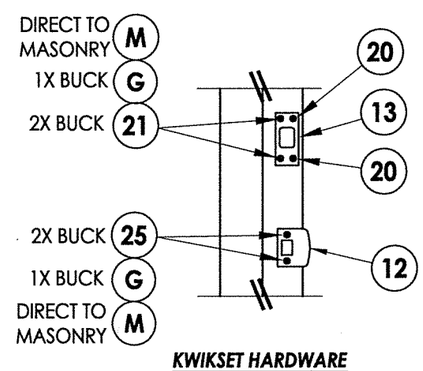

KWIKSET HARDWARE

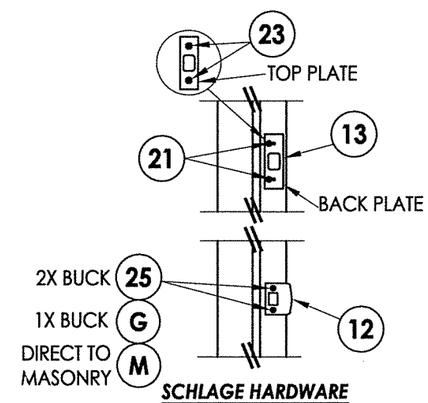

SCHLAGE HARDWARE

HARDWARE DETAILS

STATE OF FLORIDA
L. F. SCHMIDT
LICENSE
No. 43409
PROFESSIONAL ENGINEER

June 7, 2022

Documents Prepared By:
Lyndon F. Schmidt
P.E. No. 43409

RW BUILDING CONSULTANTS, INC.
P.O. Box 230, Valrico, FL 33595
Phone No.: 813.659.9197
FBPE Registry No. 9813

PRODUCT: STEVES & SONS FIBERGLASS DOOR

PART OR ASSEMBLY: FRAME ANCHORING & HARDWARE DETAILS

NO.	DATE	REVISIONS	BY

DATE: 4/20/22
SCALE: N.T.S.
DWG. BY: RW
CHK. BY: LFS
DRAWING NO.: FL-41479.3
SHEET 12 OF 13

© 2022 R.W. BUILDING CONSULTANTS INC.

Z:\Clients\Steves and Sons - Permanent\A - Florida Product Approvals\FL-41479 LEGACY SERIES\C - Drawings\FL-41479 (2020)\FL-41479.3.dwg

BILL OF MATERIALS

ITEM #	DESCRIPTION	MATERIAL
A	1X BUCK (G >= 0.42)	WOOD
B	2X BUCK (G >= 0.42)	WOOD
C	1/4" MAX. SHIM SPACE	-
D	1/4" X 2-3/4" PFH DeWALT OR ITW CONCRETE SCREW	STEEL
E	MASONRY - 3,000 PSI MIN. CONCRETE CONFORMING TO ACI 301 OR HOLLOW BLOCK CONFORMING TO ASTM C90	CONCRETE
F	1/4" X 3-3/4" PFH DeWALT OR ITW CONCRETE SCREW	STEEL
G	3/16" X 3-1/4" PFH ITW CONCRETE SCREW	STEEL
L	#10 X 2-1/2" PFH WOOD SCREW (1.15" MIN. EMB.)	STEEL
M	3/16" X 2-1/4" PFH ITW CONCRETE SCREW	STEEL
P	1/4" X 2-1/4" PFH DeWALT OR ITW CONCRETE SCREW	STEEL
1	COMPOSITE JAMB	COMP
3	COMPOSITE MULLION	COMP/LVL
7	WEATHERSTRIP	FOAM
8	SWEEP	VINYL
9	4" X 4" HINGE	STEEL
11	#9 X 3/4" PFH WOOD SCREW	STEEL
12	LATCH STRIKE PLATE	STEEL
13	DEADBOLT STRIKE PLATE	STEEL
14	INSWING THRESHOLD	ALUM/COMP
15	OUTSWING THRESHOLD	ALUM/COMP
17	INSWING SIDELITE ADAPTER	PVC
18	#8 X 3" SD TRIM SCREW	STEEL
20	#9 X 1/2" PFH WOOD SCREW	STEEL
21	#12 X 2-1/2" PFH WOOD SCREW	STEEL
23	#8 X 3/4" PFH WOOD SCREW	STEEL
25	#8 X 2-1/2" PFH WOOD SCREW	STEEL
27	#7 X 1-5/8" DRYWALL SCREW	STEEL
29	#10 X 2" PFH WOOD SCREW	STEEL
34	MULTIPOINT LOCK STRIKE PLATE	STEEL
40	DOOR PANEL	-
50	SIDELITE PANEL	-

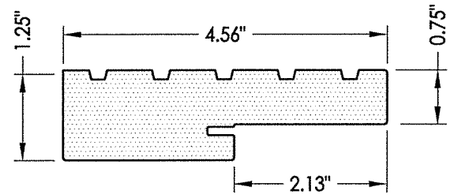

1 **COMPOSITE JAMB**
WORLDWIDE "4EVER"

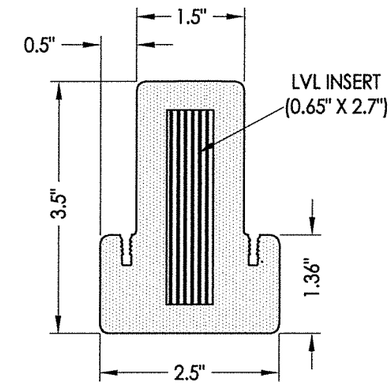

3 **COMPOSITE MULLION**

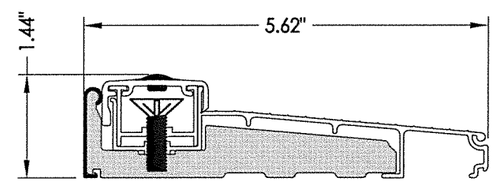

14 **INSWING THRESHOLD**
Columbia

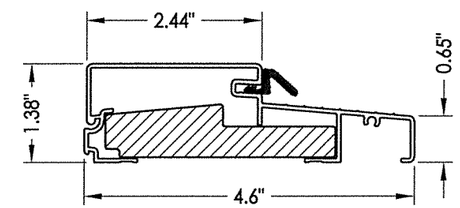

15 **OUTSWING THRESHOLD**
Columbia

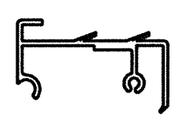

17 **INSWING SIDELITE SPACER**
Columbia

CONCRETE ANCHOR NOTES:

1. *Concrete anchor locations at the corners may be adjusted to maintain the min. edge distance to mortar joints.*
2. *Concrete anchor locations noted as "MAX. ON CENTER" must be adjusted to maintain the min. edge distance to mortar joints, additional concrete anchors may be required to ensure the "MAX. ON CENTER" dimension are not exceeded.*
3. *Concrete anchor table:*

ANCHOR TYPE	ANCHOR SIZE	MIN. EMBEDMENT	MIN. CLEARANCE TO MASONRY EDGE	MIN. CLEARANCE TO ADJACENT ANCHOR
ITW BUILDEX TAPCON®	3/16"	1-1/4"	3"	1-1/2"
	1/4"	1-1/4"	2"	4"
DeWALT ULTRACON®+	1/4"	1-1/4"	1"	4"

WOOD SCREW INSTALLATION NOTES:

1. *Maintain a minimum 5/8" edge distance, 1" end distance, & 1" o.c. spacing of wood screws to prevent the splitting of wood.*

L. F. SCHMIDT LICENSE No. 43409 STATE OF FLORIDA PROFESSIONAL ENGINEER

June 7, 2022

Documents Prepared By:
Lyndon F. Schmidt
P.E. No. 43409

RW BUILDING CONSULTANTS, INC.
P.O. Box 230, Valrico, FL 33595
Phone No.: 813.659.9197
FBPE Registry No. 9813

PRODUCT: ALL SEASONS, INC. FIBERGLASS DOOR

PART OR ASSEMBLY: BILL OF MATERIALS & COMPONENTS

NO.	DATE	REVISIONS	BY

DATE: 4/20/22
SCALE: N.T.S.
DWG. BY: RW
CHK. BY: LFS
DRAWING NO.: FL-41479.3
SHEET 13 OF 13

© 2022 R.W. BUILDING CONSULTANTS INC.

Z:\Clients\Steves and Sons - Permanent\A - Florida Product Approvals\FL-41479 LEGACY SERIES\C - Drawings\FL-41479 (2020)\FL-41479.3.dwg